TM-060

Operation · Maintenance · Service Manual

ATARI INC. 14600 WINCHESTER BLVD, LOS GATOS, CA 95030 • 408/374-2440 • TELEX 357-488

Copyright © 1976 by Atari, Inc.

Table of Contents

I. Introduction 1

1.1 Physical Description of Game 1

1.2 Brief Description of Play 1

II. Specifications 3

2.1 General 3

2.2 Electrical 3

2.3 Environmental 3

2.4 Owner/Operator Options for Structuring of Play 3

2.5 Accessories Available on Separate Order 3

III. Theory of Operation 5

3.1 Functional Description of Game 5

3.2 General Information 5
- 3.2.1 Energizing the Game
- 3.2.2 TV Monitor
- 3.2.3 Picture on TV Screen
- 3.2.4 Tape Deck

3.3 Game Sequence 6
- 3.3.1 Operating Modes
- 3.3.2 Attract Mode
- 3.3.3 Play Mode
- 3.3.4 Owner/Operator Options

3.4 Detailed Technical Description of Operation 9
- 3.4.1 General Comments
- 3.4.2 PCB I
- 3.4.3 PCB II
- 3.4.4 Relay PCB

IV. Installation Instructions 11

4.1 Unpacking Instructions 11
- 4.1.1 Examination for Shipping Damage
- 4.1.2 Mechanical Inspection

4.2 Energizing the Game 11
- 4.2.1 Application of AC Power
- 4.2.2 Check on Operation of Interlock Switch

4.3 Game Structuring 11
- 4.3.1 25¢/Player—25¢/Game
- 4.3.2 Duration of Game Sequence
- 4.3.3 Bonus Questions

4.4 Functional Check of Game Operation 13

V. Maintenance and Adjustments 15

5.1 Routine Maintenance 15
- 5.1.1 Cabinet Cleaning
- 5.1.2 Lubrication
- 5.1.3 Cleaning Tape Heads on Tape Deck
- 5.1.4 De-Magnetizing Tape Heads on Tape Deck

5.2 Adjustments on TV Monitor 15

5.3 Adjustment of Speaker Volume 15

VI. Troubleshooting and Repair 17

6.1 General Procedure 17
- 6.1.1 Identifying the Trouble Area
- 6.1.2 Locating the Trouble Cause
- 6.1.3 Correcting the Trouble Cause
- 6.1.4 Verifying Correct Game Operation

6.2 Test Equipment 18
- 6.2.1 Basic Test Equipment
- 6.2.2 Optional Test Equipment

6.3 Specific Troubleshooting Information 19
- 6.3.1 Coin Mechanism
- 6.3.2 TV Monitor
- 6.3.3 Antenna Static Modification
- 6.3.4 Tape Deck

VII. Schematics, Drawings, and Parts Lists 21

I. INTRODUCTION

1.1 PHYSICAL DESCRIPTION OF GAME

The Kee Games "Quiz Show" is a video game in which either one or two players test their knowledge by choosing answers to questions—just as in a real quiz show. The game is packaged in its own upright cabinet that rests directly on the floor. (Drawing number A005120 in Section VII of this manual shows an external view of the game.) Players stand in front, facing the screen of a black-and-white TV monitor mounted at the upper center of the cabinet. Six horizontal strips of transparent material, each strip of a different color, are affixed to a plexiglass panel placed in front of the TV screen. Only the uppermost portion of the panel has been left without a colored strip. The strips filter the white light emitted from the screen, so that to a viewer the images beneath each strip take on the color of that strip. The image colors reading from the top and moving to the bottom of the screen are: white, red, green, dark amber, blue, purple, and light yellow.

Three sets of player-operated push button switches are located on the front of the cabinet. Two sets of switches are mounted alongside the TV screen—four switches on the left side and four on the right. These serve as answer selection switches; those on the left are for the first player, and those on the right for the second player (in a 2-player game). Lamps that provide backlighting are included inside each of these eight switches. At various times during game operation the lamps light up. Colored lenses have been placed in front of the lamps, so that when illuminated the colors on each set of four switches match those of the four lowermost "answer" strips on the TV screen. (Drawing number A005117 shows the layout and identifies the colors of these switches.)

A third set of player-operated switches is located beneath the TV screen. There are three switches. The switch on the left is engraved "ONE PLAYER START" and the switch on the right is engraved "TWO PLAYER START." These switches have white lenses, and at certain times during game play they light up, making the engraved words readily visible to the players. The words "CATEGORY SELECT" are printed on the panel alongside the switch in the center. This switch also has a white lens and will light up during play. (Drawing number A005114 shows details of this set of switches.)

A speaker is mounted inside the cabinet, on the right just below the "TWO PLAYER START" push button switch. During play the speaker produces ticking, buzzing, and other sounds that add to the play excitement.

Two identical coin mechanisms are located below the "CATEGORY SELECT" push button. They accept quarters only and are connected so that deposit of a coin in either one will initiate game play. The Quiz Show game features an owner/operator-adjustable option that permits on-site game structuring for either one or two players per coin. The cash box is located behind the coin mechanism access door.

1.2 BRIEF DESCRIPTION OF GAME PLAY

In Quiz Show a player's accumulated score at the end of game play is a test of knowledge. Score points are awarded for choosing correct answers to the questions that appear one at a time on the TV screen. Four answer choices appear below every question. The question is written in green, and the choices are written in the following colors: choice A in amber, choice B in blue, C in purple and D in yellow. The four answer colors match the colors on the two sets of four switches located on each side of the TV screen. This means that during play the amber answer can be selected by depressing the amber push button, the blue by depressing the blue push button, and so forth.

Players have an incentive to answer quickly in the Quiz Show game. Each question, along with its four answer choices, remains on the TV screen for a duration of approximately seven seconds. But players will receive the largest score—500 points—if they choose the correct answer during the first one-tenth of the 7-second question duration. Similarly, they receive 450 points if they choose the correct answer during the second one-tenth of the 7-second duration, and so forth, until all seven seconds have elapsed. A clock's "ticking" sound is produced by the speaker to let players know each time the score point count has decreased by 50 points or 0.7 seconds. After the question duration has elapsed (or sooner if a player chooses the correct answer), that question disappears and a new question is written on the screen.

Players are penalized for choosing incorrect answers; after each wrong selection, that player's answer push buttons are disabled for approximately two seconds. In a 2-player game, the opponent player's answer push buttons remain enabled, until that player chooses a wrong answer as well. The speaker produces a "beeping" sound whenever an incorrect answer is chosen, and a less pronounced "buzzing" sound whenever a correct answer is chosen. A "bonk" sound is produced when the 7-second question duration elapses.* The game has a tape deck that accepts a magnetic tape cassette on which 1000 different questions have been prerecorded. The questions are divided into four categories (people, sports, movies, potpourri) with 250 questions per category. During play the category of succeeding questions can be changed by merely depressing the "CATEGORY SELECT" push button when it is illuminated.

The Quiz Show game features an owner/operator option that permits structuring the duration of a game play sequence to either be a fixed number of questions, or else to be a fixed elapsed

time. When structured for questions, the elapsed time will depend on player response speed. When structured for a fixed elapsed time, the number of questions per play will vary. (Fast-responding players will have an opportunity to answer more questions than slow-responding players will.)

The Quiz Show game also features an owner/operator option that permits the awarding of "bonus" questions to players who reach or exceed a given accumulated score level during a play sequence. (The level is 4000 points in 1-player game sequences, and 3000 points in 2-player sequences.) By answering bonus questions correctly, players get to add even more points to their accumulated score.

If accumulated scores are below bonus level when the play sequence ends, a player rating (DUNCE, LUCKY, SMART or GENIUS) appears above the player's score. If a player's score has reached or exceeded bonus level when the play sequence runs out, the speaker produces a "whooping" sound and additional bonus questions will appear.

After a game sequence ends, all player controls are disabled and the game ceases to produce sounds. However, a message with certain portions blinking will appear on the screen. Also the lamps behind the answer push buttons turn on and off sequentially. These visual indications attract the attention of potential players.

If desired, the owner/operator can order one or more additional question tape cartridges. By changing the cartridge a new set of 1000 questions will appear during play.

II. SPECIFICATIONS

2.1 GENERAL

Cabinet Dimensions:	Height 53¼ in., Width 31½ in., Depth 23½ in.
Cabinet Weight:	234 lbs.
TV Monitor:	Motorola Model XM501, black and white, with 19-inch screen.
Coin Mechanisms:	Two identical mechanisms (connected in parallel); accept quarters only.
Cash Box:	Removable; located behind locked access door to coin mechanism assembly.
Power Cord:	Approximately 6 ft. long, extending from rear of cabinet and having grounded three-prong plug for conventional wall outlets.

2.2 ELECTRICAL

Power Requirement:	Uses conventional wall outlet providing 60-cycle AC (60 Hz, single-phase) at 110 volts; power consumption rated at 130 watts.
Fusing:	All fuses located inside cabinet; TV monitor has two 1-amp fuses and remainder of game is protected by a 2-amp slow-blow fuse.
Power Interrupt Switch:	This is a safety switch located inside the cabinet. It interrupts AC power to the game whenever the rear access panel is unlocked and opened.

2.3 ENVIRONMENTAL

Operating and Storage Temperature Range:	from 32°F to 120°F (Ambient Temperature)
Relative Humidity:	from 0% to 80% *without* condensation

2.4 OWNER/OPERATOR OPTIONS FOR STRUCTURING OF PLAY

- Choice of 25¢ per player or 25¢ per game
- Adjustable duration of game sequence, either by number of questions or by amount of elapsed time
- Choice of bonus questions given for high score, or no bonus questions offered

2.5 ACCESSORIES AVAILABLE ON SEPARATE ORDER

Video Probe:	order from ATARI
Universal Test Fixture:	order from ATARI, catalog no. TF101

Additional pre-recorded question tape cartridges

III. THEORY OF OPERATION

3.1 FUNCTIONAL DESCRIPTION OF GAME

The block diagram in Figure 3-1 shows the major functional parts of the Quiz Show game and how they are interconnected. Note that PCB I, the main printed circuit board, sends a composite video signal to the TV monitor and a separate "audio in" signal to PCB II (which has the amplifier that drives the speaker). Also note that PCB I sends out "strobe" signals to the front panel switches. During play as players depress these switches, the strobe signals pass through the switch contacts and on to PCB II, where they are multiplexed onto the "SWITCH LINES" leading back to PCB I.

A relay on the relay PCB is energized by a signal from PCB I only during play. When the relay contacts are closed the tape deck receives AC power and it exercises the tape cartridge so that tape moves past the read heads. The signals produced by the tape deck go to PCB II, which then sends tape data signals to PCB I.

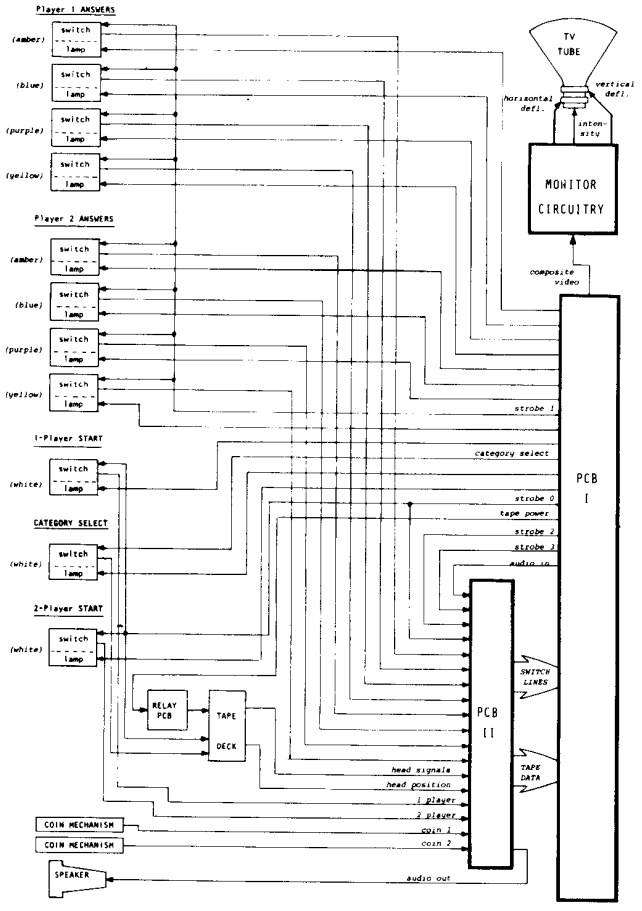

Figure 3-1 Functional Block Diagram of Quiz Show Game

This next paragraph is the first paragraph under Functional Description of Game with "video" two times.

The block diagram in Figure 3-1 shows the major functional parts of the Quiz Show game and how they are interconnected. Note that PCB I, the main printed circuit board, sends a composite video video signal to the TV monitor and a separate "audio in" signal to PCB II (which has the amplifier that drives the speaker). Also note that PCB I sends out "strobe" signals to the front panel switches. During play as players depress these switches, the strobe signals pass through the switch contacts and on to PCB II, where they are multiplexed onto the "SWITCH LINES" leading back to PCB I.

3.2 GENERAL INFORMATION

The general information about the Quiz Show game given here provides a background for understanding the Installation Instructions in Section IV of this manual, and the description of game operation in paragraphs 3.3 and 3.4.

3.2.1 ENERGIZING THE GAME: The Quiz Show game does not have an external "power on" switch. Instead the game is energized as soon as the power cord is plugged into an active AC wall outlet. This outlet must provide the AC power listed in the Specifications (Section II of this manual).

3.2.2 TV MONITOR: The game's TV monitor is a self-contained transistorized television monitor supplied to Atari by Motorola. Because the composite video signal sent to the monitor by the game control circuitry differs in certain important respects from the signal derived from commercial TV broadcasts, the picture appearing on the screen is unlike that of a home TV set and the monitor does not produce any sound.

3.2.3 PICTURE ON TV SCREEN: The game's composite video signal is constructed to produce only two video levels—black and white—instead of the more or less continuous shades of gray seen on a home TV screen. The images in the picture will be alphanumeric characters only—letters, numerals and symbols such as punctuation marks, asterisks, etc. At various times some characters may be made to blink on and off, while the rest of the characters in the picture remain lit. Also at certain times some words may appear as "inverted" video, that is, the characters are written in black on a white background instead of being written in white on a black background. Figure 3-2 shows an example of a word written both in normal and in inverted video.

The screen is divided up into several rectangular regions called windows. The words written in any specific window generally are vertically centered within the window. Also the windows are arranged so that they each fall under only one of the six colored horizontal strips that are affixed to the plexiglass panel, or else fall under the uppermost portion of the screen not having a colored strip. The pur-

pose of this design feature is to make it easier for the player to pick out the question and answer lines quickly.

NORMAL VIDEO: white characters against a black background

INVERTED VIDEO: black characters against a white background

Figure 3-2 Illustration of Normal and Inverted Video

3.2.4 TAPE DECK: The game's 1000 questions are pre-recorded on a magnetic tape cartridge. This cassette is plugged into a multi-track tape deck located inside the game cabinet. The cartridge contains ¼-inch wide tape and its mechanical dimensions are identical to those of standard commercial cartridges commonly sold in hi-fi stores. For servicing or for changing the questions, the cartridge is removed from the tape deck by pulling it straight out. To insert a cartridge just push it in until it stops. Handling of the tape is neither required nor recommended, just as in consumer tape deck equipment.

The tape is moving only while questions are being displayed on the TV screen. During the attract mode, and prior to pressing a lighted "START" push button at the beginning of a play sequence, the tape is stationary.

3.3 GAME SEQUENCE

3.3.1 OPERATING MODES: During use the Quiz Show game can be described as operating in either of two modes, attract or play. Plugging the power cord into an active AC outlet energizes the game and it starts out in the attract mode. The game remains in the attract mode until a player deposits a coin and the coin clears the coin mechanism, at which point a signal derived from the coin mechanism causes the game to go into the play mode. The game remains in the play mode until the play sequence ends, at which time the game reverts back to the attract mode.

3.3.2 ATTRACT MODE: On the TV screen a standard message picture appears continuously throughout the attract mode. Figure 3-3 shows the message that appears when the game is structured for two players per coin. When structured for one player per coin, the third line from the bottom will read "25 CENTS PER PLAYER" instead of "25 CENTS PER GAME." The asterisks surrounding the words "THE KEE GAMES QUIZ SHOW" will be blinking on and off. The words "GAME OVER" also blink. The colors in which the words appear are as labeled in the figure.

In addition to the blinking portions of the picture on the TV screen, certain lamps behind the players' answer push buttons will also be blinking on and off. The lamps will change in a random sequence, four at a time, every 3 or 4 seconds. These visual indications will draw player attention to the game.

3.3.3 PLAY MODE: A player causes the game to change over from the attract mode to the play mode by depositing a coin in either coin mechanism. When the coin clears the mechanism, a signal sent from the mechanism causes the game control circuitry to respond as follows. If the game is structured for 1 player/coin, the left-hand push button switch (engraved with the words "ONE PLAYER START") will light up. Under this structuring, a second coin must be deposited if two players wish to play. When this second coin clears, the game control circuitry responds by extinguishing the backlighting on the left-hand switch and lighting up the right-hand switch (engraved with the words "TWO PLAYERS START"). If the game is structured for 2 players/coin, both push button switches will light up as soon as one coin clears the coin mechanism.

After a coin is deposited the picture on the TV screen is changed. Instead of the message shown during the attract mode, a new instruction message will appear (see Figure 3-4). This instruction message remains as long as one (or both) "START" push buttons are lighted. Also the lamps behind the answer push buttons stop blinking after a coin is deposited. If only the "ONE PLAYER START" is lighted, then only the left-hand set of answer push buttons is lighted; if both "ONE PLAYER START" and "TWO PLAYER START" are lighted, then all eight answer push buttons are lighted.

To begin the play sequence a player must now depress the appropriate lighted "start" push button. After this is done the game responds by removing the instruction message. If the game is structured not to allow bonus questions (Switch 2 on PCB II in the "0" position), then the game next displays the first question message on the TV screen. If the game is structured to allow bonus questions, then the game next displays a single-line message telling how many bonus questions will be awarded, and what

score level must be attained. For example, if the game were structured for five bonus questions, then after the depression of "ONE PLAYER START" the following line would appear:

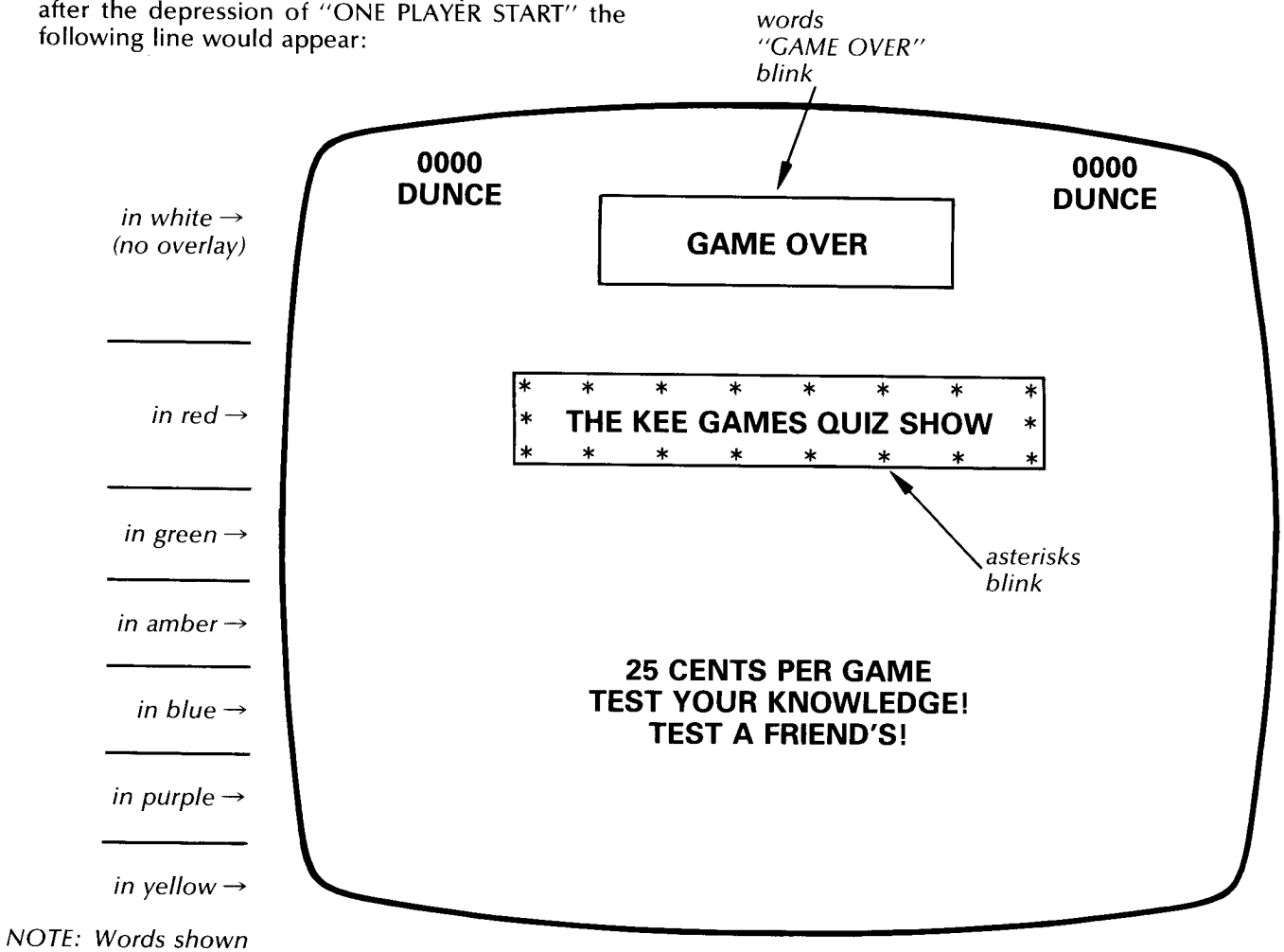

Figure 3-3 Message During Attract Mode

5 BONUS QUESTIONS FOR 4000 SCORE,
and after the depression of "TWO PLAYER START" the line
5 BONUS QUESTIONS FOR 3000 SCORE
would appear. (The numeral 5 would be shown in inverted video.) The line remains on the screen for approximately four seconds, then it disappears and the game next displays the first question message.

Figure 3-5 shows a typical question message that would appear during play. The number written after the words "QUESTION TIMER" starts out as 500. It changes to 450 when the speaker produces the first "ticking" sound, to 400 when the speaker produces the second ticking, and so forth, until either a player chooses the correct answer or the question time runs out. The number will be at 000 if the question time runs out. The number written after "QUESTION TIMER" represents the amount of score points given to a player upon choosing the correct answer.

The lighted answer push buttons go dark when players depress them. If the player chooses the correct answer, the words in that answer are briefly made to appear in inverted video characters (and the speaker produces the buzzing sound). If question time runs out, the correct answer is also inverted briefly. Then the question disappears and a new question appears on the TV screen. If the player chooses an incorrect answer, the speaker produces the "beeping" sound but the picture on the TV screen remains unchanged. However, the penalty is that all four of that player's answer lights go dark and those push buttons are disabled for two seconds.

Each player's accumulated score is displayed on the TV screen, with player 1's score at the top left, and player 2's score at the top right. (In a 1-player game only the player 1 score is displayed.)

When the "category select" push button is lighted, players can change the category of the succeeding question. If a category 4 question is being displayed, after a player depresses the push button the next question will be from category 1.

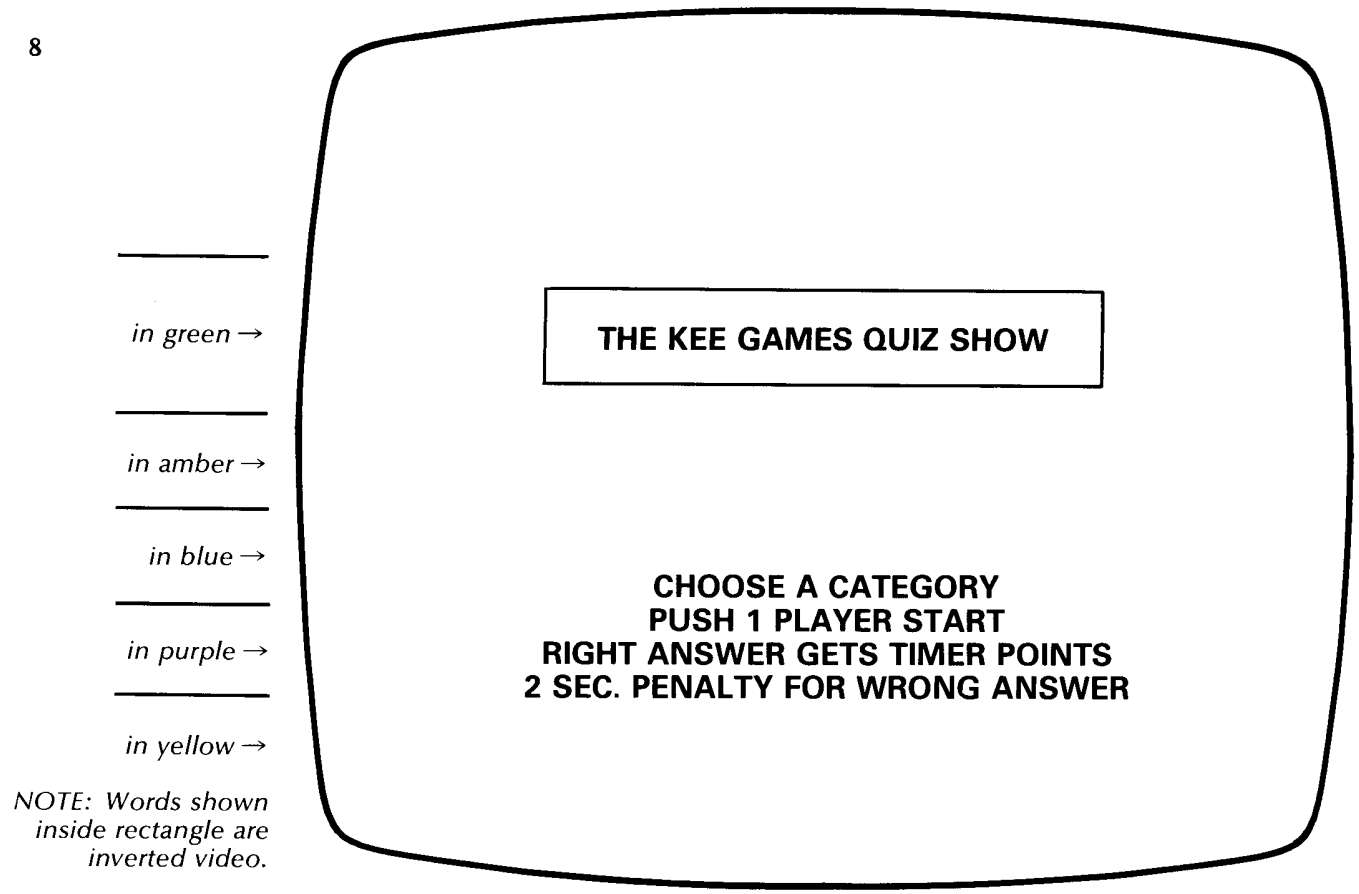

Figure 3-4 Instruction Message

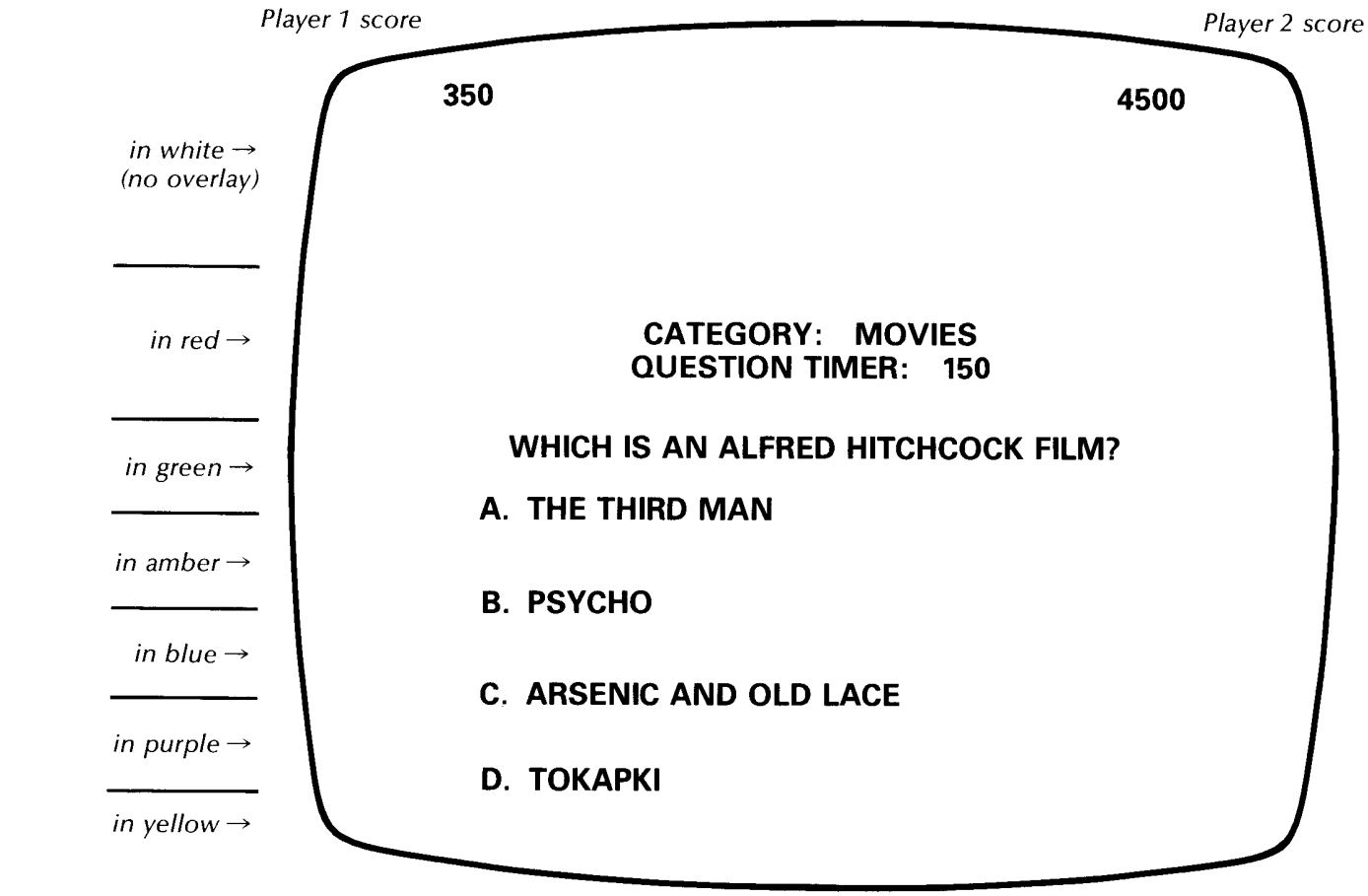

Figure 3-5 Typical Question Message

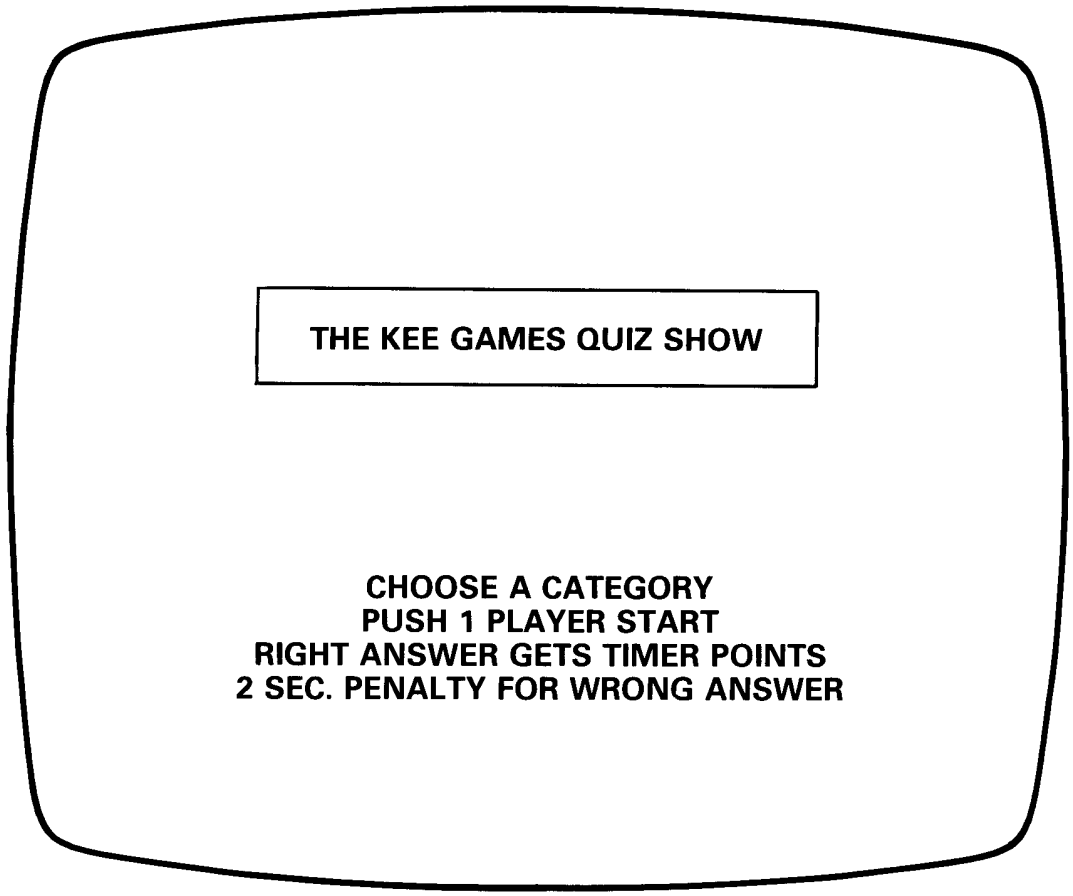

Figure 3-4 Instruction Message

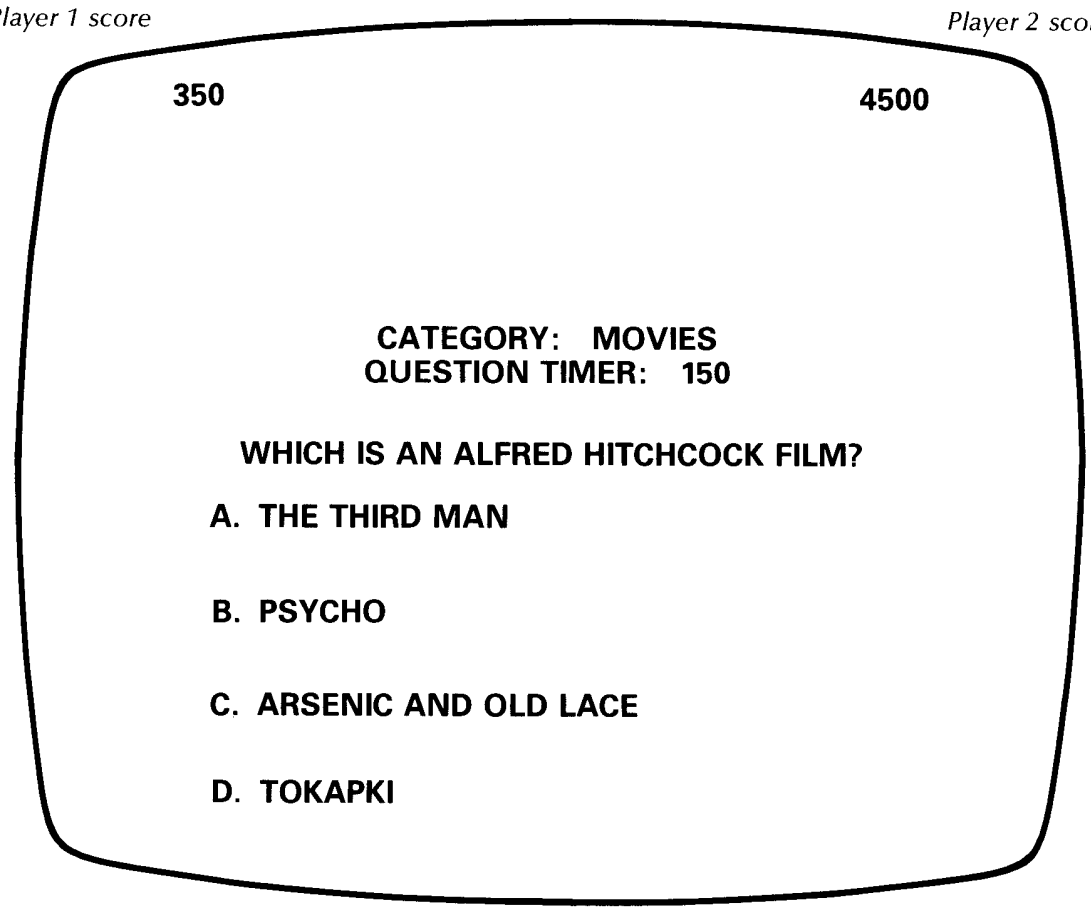

Figure 3-5 Typical Question Message

If the game is structured for play sequence length determined by a pre-set elapsed time, the questions stop appearing after the time has run out. If structured for sequence length determined by a pre-set number of questions, the questions stop appearing after the final question has been answered (or after that question's time ran out). At this point in the play sequence if the game has not been structured to allow bonus questions, the player ratings will appear on the TV screen, just below the accumulated scores. Player 1's rating will be under the player 1 score, and player 2's will be under the player 2 score. After the player ratings have been showing for several seconds, the game will revert to the attract mode. Then both scores will be reset to all zeros (0000), and the player ratings will disappear.

If the game has been structured to allow bonus questions, then the pre-set number of additional questions will appear one at a time, provided that one (or both) accumulated scores have reached or exceeded the bonus score point level. Before the first bonus question appears, the word "BONUS" will be written on the screen and will blink, and the speaker will produce the "whooping" sound. After the last bonus question the player ratings and final scores continue to appear for several seconds, and then the game reverts back to the attract mode.

3.3.4 OWNER/OPERATOR OPTIONS: The Quiz Show game features three options that allow the owner/operator at the game site to structure the game play sequence—that is, to change some of the rules or to change the game play duration. All three options are simple manual adjustments.

(a) 25¢ Per Player/25¢ Per Game. This option is selected on a SPST DIP bit switch mounted on PCB II inside the cabinet. With the appropriate button set in one position, the game is structured for 25¢ per player (50¢ required for 2 players). When the opposite button is pushed, after deposit of 25¢ either a 1-player game or a 2-player game can be chosen. Subparagraph 4.3.1 in Section IV of this manual gives instructions for making this adjustment.

(b) Duration of Play Sequence. This option allows structuring the game either to run through a pre-set number of questions per play sequence, or else to end the play sequence after a pre-set amount of time has elapsed. The selection is done in two steps, each step consisting of setting up a position on a switch mounted on PCB II. The first selection is for either question count or the elapsed time structuring. The second step is also a switch selection, and is done on the same type of DIP switch. Certain buttons being pushed on this switch determines the specific number of questions or else the number of seconds in the elapsed time. Subparagraph 4.3.2 gives instructions for making this adjustment.

(c) Number of Bonus Questions. This option sets up the number of bonus questions, if any, to be added to the play sequence as the player reward for attaining the bonus score level. This option is also selected on a binary-coded DIP switch mounted on PCB II. If the switch is in the "0" position, no bonus questions are given. If in the "1" position, one question will be given; if in the "2" position, two questions will be given, and so forth. Subparagraph 4.3.3 gives instructions for making this adjustment.

3.4 DETAILED TECHNICAL DESCRIPTION OF OPERATION

3.4.1 GENERAL COMMENTS: The game's electronic circuitry is contained on printed circuit boards, as follows: PCB I (main board), PCB II and the relay PCB. The TV monitor's circuitry is contained within the monitor chassis. Other components that connect to the game circuitry include: the front panel player push button switches and lamps, the speaker, two coin mechanisms, the interlock safety switch, the tape deck, and transformers and other parts mounted on the electronics tray assembly.

This part of the manual gives brief technical descriptions for those portions of the control circuitry regarded as field-repairable. Correction of trouble causes traced to certain portions of the circuitry on PCB I may require replacement of the entire board. The drawings included in Section VII of this manual supplement the text given here.

On the PCB I and on its schematic, each integrated circuit device location is identified by a column letter designation (such as A through P) and a row number designation (1 through 9).

On the PCB I schematic, the symbol "P" (which appears at various inputs to logic gates and other integrated circuits) indicates a connection to +5 volts through a pull-up resistor.

3.4.2 PCB I: The video sync and timing circuitry is shown at the top of sheet 1 of the schematic. The basic CLOCK timing signal is derived from a 12-MHz crystal-controlled oscillator circuit. The CLOCK signal is divided down by binary counters to produce timing signals that form the basis for the synchronization information included in the composite video signal sent to the TV monitor. These timing signals are also used internally on the board. The H BLANK and H SYNC signals are the horizontal synchronization contribution, and the V SYNC and V BLANK are the vertical contribution.

The composite video signal is constructed at the junction of resistors R37, R38, and R39 shown in the lower right corner of sheet 1. The COMP SYNC signal adds the synchronization information via R38. The picture information is added via R39. This contribution includes the effects of the INVERT and BLINK signals, as well as the character information

that is applied in parallel to the type-74166 8-bit shift register. The composite video signal produced at edge connector pin 8 is sent to the TV monitor via the harness.

On sheet 3 the ten type-MCR106 SCR devices shown in the upper right corner provide current to filaments of the lamps behind the eight answer push buttons and behind the two "START" push buttons. The signal CATEGORY SELECT, produced at the common collectors of Q11, provides filament current to the lamps behind the category select push button and also increments heads on the tape deck. The signal TAPE POWER, produced at the common collectors of Q15, provides current for the energizing coil of the relay on the relay PCB.

The AUDIO OUT signal, which contains all the sound information, goes via the harness to PCB II. There this signal is used to drive the "audio out" amplifier stage.

In the lower left corner of sheet 3 the set of four STROBE signals, produced at the emitters of transistors Q1 through Q4, are used to interrogate the front panel push button switches and the coin mechanisms, and to interrogate the game structuring switches (SW1, SW2, and SW3) located on PCB II. The timing of the STROBE signals allows no more than one strobe to be active at any one time.

3.4.3 PCB II: The diodes shown on the left side of the sheet perform a "multiplexing" function for the strobe interrogation signals produced on PCB I. The signals SW0 through SW7, the result of the multiplexing, are sent to PCB I via the harness.

The amplifier stage shown in the upper center of the sheet amplifies the AUDIO IN signal coming from PCB I. The emitter of MJE 3310 transistor device connects via the harness to the speaker. The potentiometer R12, connected between the type-LM339 amplifier and the base of the MJE3310 device, provides the speaker volume adjustment described in paragraph 5.3 in Section V of this manual.

The two type-LM339 amplifier circuits shown at the lower center of the sheet convert the AC head signals from the tape deck into DC data signals. These tape data signals are sent to PCB I.

3.4.4 RELAY PCB: The circuit path for current flow through the coil of relay K1 is as follows: from a type-LM309 amplifier, positive voltage, power supply circuit on PCB I; then out on edge connector pin F and through the harness to pin F of the PCB II edge connector; through the coil and back out again on edge connector pin E; then through the harness to PCB I edge connector pin 16 (the signal TAPE POWER); and, when Q15 is conducting, returning to ground.

The two SCR devices on the board cannot pass AC current to the tape deck unless relay K1 is energized (contacts closed).

IV. INSTALLATION INSTRUCTIONS

4.1 UNPACKING INSTRUCTIONS

4.1.1 EXAMINATION FOR SHIPPING DAMAGE: Before shipment from the factory, components and sub-assemblies of each game are carefully checked for proper operation. However, during shipment some adjustments may have changed or parts may have been damaged. Upon initial removal of the game from the shipping container, first examine the exterior of the cabinet. Then open the rear panel access door and also examine the interior. Any shipping damage such as a dented, cracked or broken cabinet, sub-assemblies broken loose, etc., should be reported immediately to the shipper and to Atari, Inc.

4.1.2 MECHANICAL INSPECTION: After determining that the game has been received in good condition, carefully inspect the interior parts and verify the following:

(a) All slip-on and plug-in connectors are firmly seated (particularly the PCB edge connector)
(b) The fuses are all seated in their holders
(c) No loose foreign objects are present (especially metal objects which could cause electrical short circuits)
(d) No harness wires have become disconnected or pulled loose.

Be sure *all* assemblies have been checked. Do not go on to the remaining paragraphs in this section until the above mechanical inspection has been thoroughly performed.

4.2 ENERGIZING THE GAME

4.2.1 APPLICATION OF AC POWER: Close the rear panel access door, making sure that it is completely shut at the bottom, and remove the key from the lock. Plug the power cord into an AC outlet providing the AC power listed in the Specifications (Section II of this manual). The wall outlet must accept a three-prong plug and the receptacle must be connected to a good earth ground.

After the power cord has been plugged in, the proper response from the game is that images appear on the TV screen.

If there is no response at all from the game, unplug the power cord and check the AC wall outlet. A simple, safe way to check for presence of AC power at the wall outlet is to plug in an appliance known to be working properly—such as a table lamp, radio, or an electric clock. If the wall outlet passes the check, then presume that the trouble is with the game and refer to Section VI of this manual.

CAUTION: No troubleshooting steps should be attempted inside the cabinet by anyone not familiar with safety measures and repair procedures on electrical equipment.

Do not go on to the remaining paragraphs in this section until the proper response described above has been observed.

4.2.2 CHECK ON OPERATION OF INTERLOCK SWITCH: The interlock switch is a safety switch mounted inside the cabinet, near the bottom edge of the rear panel access door. At the factory this switch is mechanically adjusted so that it will automatically transfer to its "off" position (switch contacts open) whenever the rear panel access door is opened. When the interlock switch is in its "off" position, the AC power leading to the game's power supply is interrupted. When the access door is closed, the interrupt switch is adjusted to be in the "on" position (switch contacts closed) and AC power is allowed to reach the game's power supply, meaning that the game can operate.

After application of AC power per paragraph 4.2.1 above, correct operation of the interlock switch can be checked as follows: unlock the rear panel access door and slowly open the door. The correct response is that by the time the edge of the door has moved about 2 to 3 inches away from the cabinet, the TV screen should go dark, verifying that the interlock switch has automatically transferred to "off." While opening the access door do not insert fingers inside the cabinet, and do not allow foreign objects to fall inside. If the TV screen continues to be lighted up even after the door has been opened, immediately close and lock the door, and unplug the power cord from the wall outlet. Then refer to Section VI of this manual to replace and/or adjust the interlock switch.

Do not go on to the remaining paragraphs in this section until the operation of the interlock switch has been checked and found to be correct.

4.3 GAME STRUCTURING

Before putting the game into operation at the game site, the game structuring should be defined by the owner/operator. The term "game structuring" refers to the game rules and the length of the play sequence. Paragraph 3.3.4 of Section III in this manual covers the owner/operator options featured in this game and describes how they affect the game structuring.

Before performing any adjustment, the game should be de-energized or not operating. Further, it is also recommended that the power cord be unplugged beforehand.

Unlock and open the rear panel access door; doing this should cause the interlock switch to de-energize the game, as described in paragraph 4.2.2. If the switch fails to de-energize the game, immediately close and lock the door, unplug the power cord, and refer to Section VI of this manual to adjust and/or replace the switch.

While being careful to avoid touching any parts of the body against the TV chassis components or other wiring connections inside the cabinet, find printed circuit board II (PCB II) on the electronics tray. (PCB II is located next to the tape deck and is about the same size as the tape deck. Do not mistake PCB I, which is mounted inside a perforated metal enclosure, for the smaller PCB II.)

Examine the surface of PCB II and locate the three SPST (single-pde, single-throw) DIP switches. It will not be necessary to unplug and remove the board from the electronics tray. The designations "SW1," "SW2" and "SW3" are engraved onto the surface of the PCB alongside the switches. Figure 4-1 shows the approximate locations of these switches, and drawing number A005231 in Section VII of this manual shows their exact locations.

4.3.1 25¢/PLAYER—25¢/GAME: This option is selected on Switch 1, at the rearmost pair of buttons (position no. 4) on the switch assembly (closest to the edge connector end of the board). Figure 4-1 is labeled to show the structuring for each of the two stud positions. Note that the pairs of buttons labeled "1" and "2" are not used in the Quiz Show game.

4.3.2 DURATION OF GAME SEQUENCE: Positions on both Switch 1 and Switch 3 have to be selected. Position no. 3 on Switch 1 determines whether the duration is to be a fixed time or a fixed question count. Figure 4-1 is labeled to show the structuring for each of the pairs of buttons. The position selected on Switch 3 determines the number of seconds in the fixed time, or the number of questions in the fixed question count. Table 4-1 summarizes the structuring set up by the various combinations of positions on Switches 1 and 3.

Setting on Switch 1	*Setting on Switch 3*	*Duration of Play Sequence*
TIMED	0	50 sec.
TIMED	1	60 sec.
TIMED	2	70 sec.
TIMED	3	80 sec.
TIMED	4	90 sec.
TIMED	5	100 sec.
TIMED	6	110 sec.
TIMED	7	120 sec.
TIMED	8	130 sec.
TIMED	9	140 sec.
QUESTION COUNT	0	5 questions
QUESTION COUNT	1	6 questions
QUESTION COUNT	2	7 questions
QUESTION COUNT	3	8 questions
QUESTION COUNT	4	9 questions
QUESTION COUNT	5	10 questions
QUESTION COUNT	6	11 questions
QUESTION COUNT	7	12 questions
QUESTION COUNT	8	13 questions
QUESTION COUNT	9	14 questions

Table 4-1

4.3.3 BONUS QUESTIONS: The position of Switch 2 determines how many bonus questions will be added to the play sequence if players reach the bonus score level during regular play. A small engraved numeral that appears in a window in the switch body will identify the switch position. When the switch is set in its "0" position, no bonus questions are added, regardless of player score. When in the "1" position, one bonus question can be given; when in the "2" position, two can be given, and so forth.

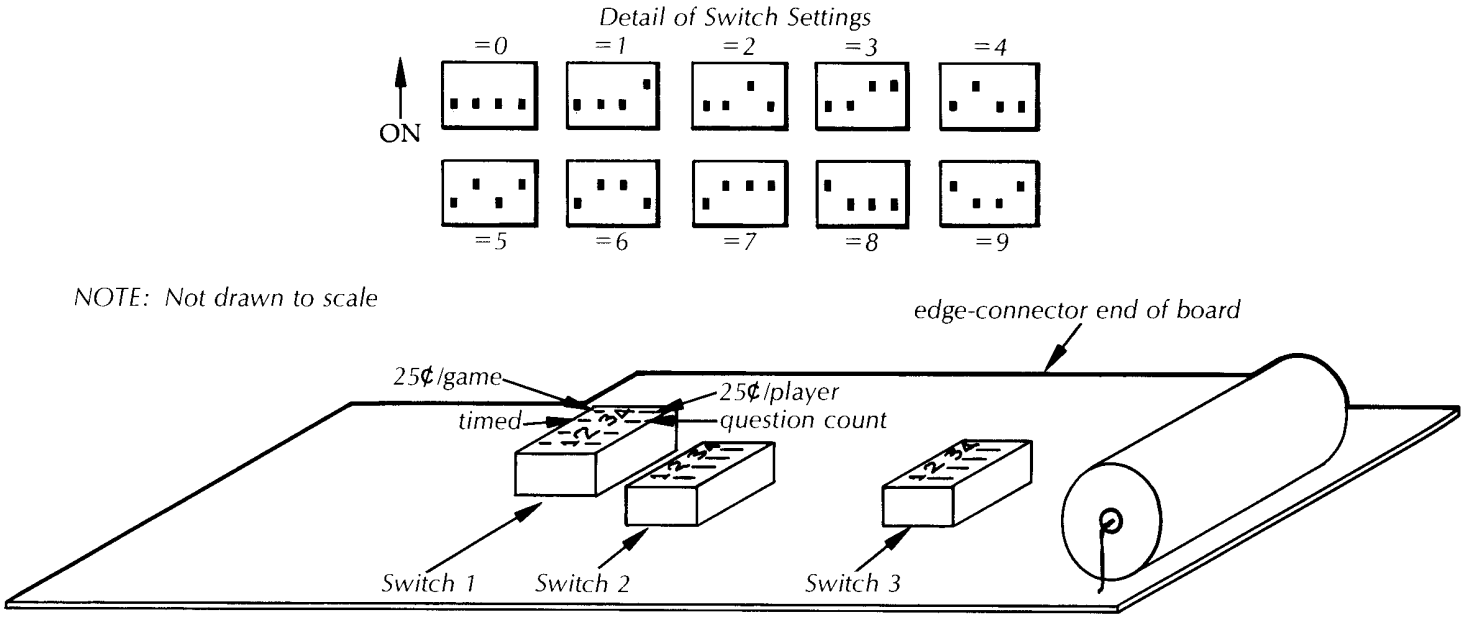

Figure 4-1 Approximate Locations of Adjustments on PCB II for Game Structuring

4.4 FUNCTIONAL CHECK OF GAME OPERATION

The following procedure provides a simple check that can be quickly performed at the game site and that does not require external test equipment. If at any point during this procedure the game's response is observed to be other than the response called for herein, assume the game is not operating correctly and refer to Section VI of this manual. If all the responses are as described here, then all major parts of the game can be assumed to be functioning correctly.

After performing the adjustments described in paragraph 4.3, Game Structuring, and in paragraph 4.2, Energizing the Game, the game should be operating in the attract mode, as per paragraph 3.3.2. The speakers should not be producing any sound. Observe the TV screen.

The picture should be the standard attract message described in subparagraph 3.3.2 in Section III, and shown in Figure 3-3. Next look at the answer push buttons. At any one time four should be blinking; and every 3 or 4 seconds, in a random sequence, the pattern should change so that before long each of the eight has been blinking at least once. Also look at the three push buttons below the screen; none of these should be lighted. The game should not produce any response when any push button is depressed.

Deposit a coin. Doing this should cause the game to change over to the first portion of the play mode, as described in subparagraph 3.3.3. Verify that the picture on the TV screen is the instruction message shown in Figure 3-4. Also verify that the appropriate "START" push button or push buttons are lighted, as required by the game's present structuring.

Depress a lighted "START" push button. The game should respond by showing the first question and by producing game sounds. Exercise all the answer push buttons to verify that each one will produce a response from the game. (If the game is structured for 1 player/coin, it will be necessary to go through a second play sequence after the current sequence ends. Two coins will have to be deposited and the "TWO PLAYER START" push button will have to be depressed in order to enable the right-hand set of four answer switches.)

While exercising the answer push buttons, also confirm that the correct game sounds are being produced. Remember that the "whooping" sound, indicating bonus questions to be added to the play sequence, requires a bonus score level by the time that the regular play sequence ends. Also remember that *no* bonus questions are given, regardless of score, when the structuring does not allow bonus questions (that is, when Switch 2 has been set in its "0" position).

Also exercise the "category select" push button. If lighted, depressing the push button should cause it to go dark and should cause the category to change. Make sure that questions from all four categories appear on the screen during play.

After correct operation of all push buttons has been checked, deposit additional coins and verify that all the appropriate characters and words in the TV pictures appear as described in subparagraph 3.3.2 and 3.3.3.

This completes the functional check.

V. MAINTENANCE AND ADJUSTMENTS

5.1 ROUTINE MAINTENANCE

Due to its solid-state electronic circuitry, this Atari game should require very little maintenance and only occasional adjustment.

5.1.1 CABINET CLEANING: Game cabinets and glass may be cleaned with any non-abrasive household cleaner. If desired, special coin machine cleaners which leave no residue can be obtained from distributors.

5.1.2 LUBRICATION: About once every three months lightly spray the rejector linkage portion of the coin acceptor inside the coin mechanism. Use WD-40® or similar lubricant, and *avoid* spraying the entire coin acceptor.

5.1.3 CLEANING TAPE HEADS ON TAPE DECK: The tape heads inside the tape deck should be cleaned each time that coins are collected from the cash box. A tape head cleaning cartridge, available in retail stores selling consumer hi-fi equipment, is required. To clean the heads proceed as follows.

Unlock and open the rear access panel. (Doing this should de-energize the game.) Remove the question tape cartridge and insert the head cleaning cartridge in its place. Then close and lock the panel. Start a game sequence by depositing a coin and depressing a lighted "START" push button. Then wait for the written messages on the screen to disappear.

When the screen goes dark this means that the game's control circuitry is exercising the tape deck, which now has the head cleaning cartridge in place of the question tape cartridge. After the screen has been dark for approximately 10 to 20 seconds, shut off the game sequence by opening the rear panel (thus activating the interlock switch).

> *CAUTION: Allowing the game to exercise the head cleaning cartridge for longer than 10 to 20 seconds can lead to premature head wear.*

After this time has elapsed, remove the head cleaning cartridge and plug the question tape cartridge back in again. Close and lock the rear panel. This completes the head cleaning procedure.

5.1.4 DE-MAGNETIZING TAPE HEADS ON TAPE DECK: About every 4 to 6 weeks the tape heads should be de-magnetized. A head de-magnetizing accessory, available in retail stores selling consumer hi-fi equipment, is required. Perform the following procedure when using this accessory.

Unlock and open the rear access panel. (Doing this should de-energize the game.) Remove the question tape cartridge from the tape deck. To demagnetize the heads carry out the instructions of the accessory's manufacturer. Afterwards replace the question tape cartridge, and then close and lock the access panel. This completes the procedure.

5.2 ADJUSTMENTS ON TV MONITOR

The TV monitor need be adjusted *only* when the picture is distorted, or if contrast or brightness seem out of adjustment.

> *NOTE: The TV monitor is accessible only from inside the game cabinet and these adjustments have to be while the game is energized. Therefore only persons familiar with safety measures and repair procedures on electrical equipment should perform these adjustments.*

The TV monitor's adjustments function like those of a conventional commercial TV set, except that the volume adjustment has no effect. The Quiz Show game produces its should in a speaker separate from the TV monitor. Figure 5-1 shows the location of these adjustments on the rear of the monitor chassis. The following are general guidelines to follow while making these adjustments:

BRITE (Brightness)—Do this adjustment before the contrast. Adjust so that the white lines covering the screen just barely disappear, when the brightness is turned up.

CONT (Contrast)—Adjust so that the images are as bright as possible against the dark background without being blurred.

HORIZ HOLD (Horizontal Hold)—Adjust if the picture is slightly off-center horizontally, if the images appear warped, or if the picture is broken up into a series of diagonal lines. Adjust for a stable, centered picture.

VERT HOLD (Vertical Hold)—This needs adjustment only if the picture appears to be rolling up or down the screen. Adjust for a stable, centered picture.

5.3 ADJUSTMENT OF SPEAKER VOLUME

The electronic drive circuit for the speaker is provided with a potentiometer that controls volume of the sounds produced during play. This potentiometer is mounted on the smaller printed circuit board (PCB II) inside the cabinet. It can be adjusted manually, by following the procedure given below.

Unlock and open the rear panel access door; doing this should cause the interlock switch to de-energize the game, as described in subparagraph 4.2.2. If the switch fails to de-energize the game, immediately close and lock the panel, unplug the power cord, and refer to Section VI in order to adjust and/or replace the switch.

While being careful to avoid touching any parts of the body against the TV chassis components or other wiring connections inside the cabinet, find the printed circuit board and examine its surface. The

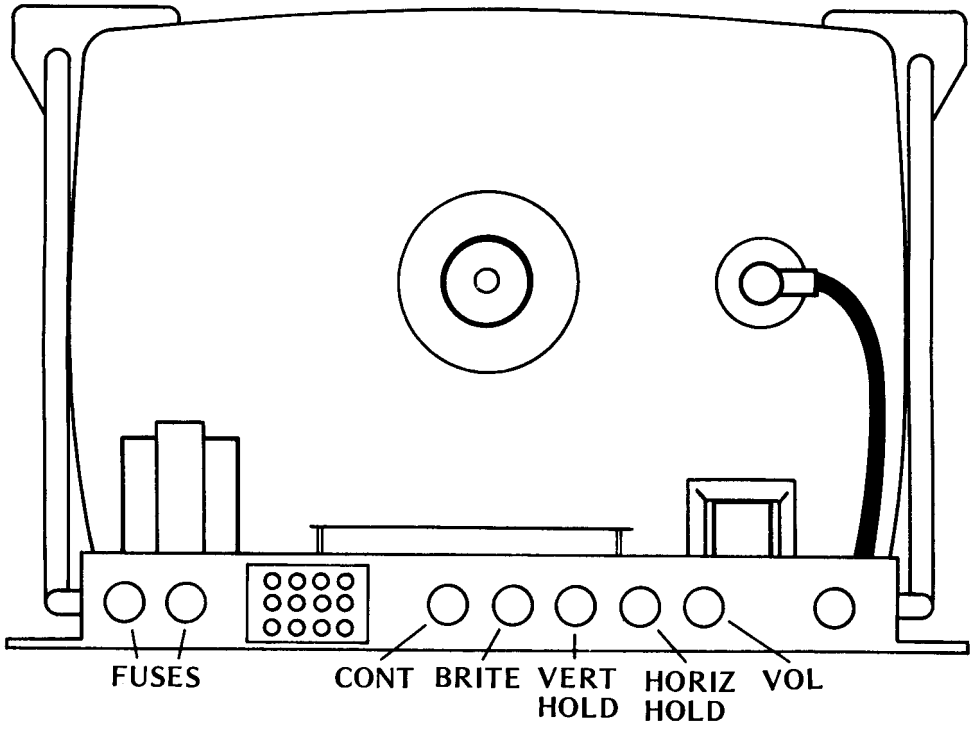

Figure 5-1 Location of Adjustments on TV Chassis

potentiometer is located near the game structuring switches SW 1, SW 2 and SW 3. Figure 5-2 shows its approximate location; its exact location is shown as R12 on drawing number A005231 in Section VII of this manual. The designation "VOL" is engraved on the PCB alongside the potentiometer. To cause the speaker to produce louder sounds, move the stud on top of the potentiometer in the direction shown by the arrow in Figure 5-2.

After performing this adjustment close and lock the rear panel and re-energize the game.

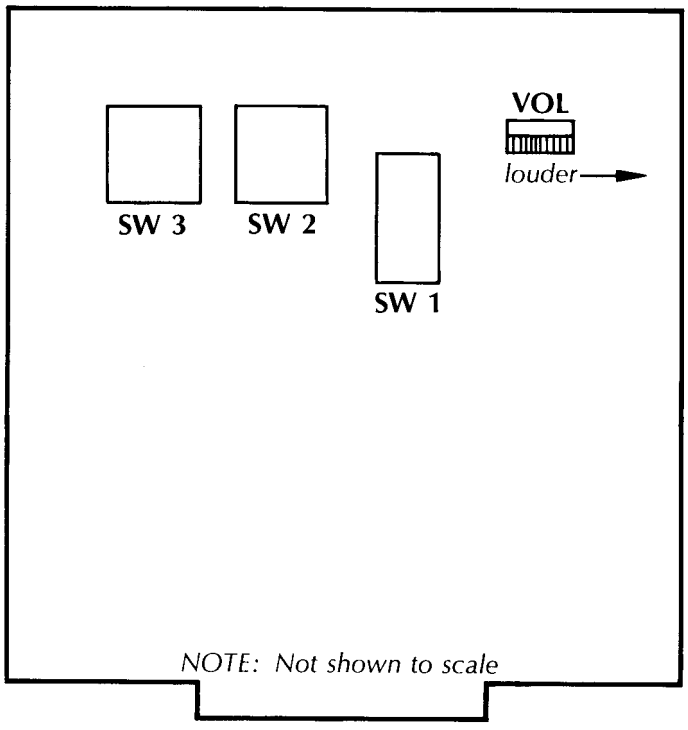

Figure 5-2 Approximate Location of Speaker Volume Adjustment on PCB II

VI. TROUBLESHOOTING AND REPAIR

6.1 GENERAL PROCEDURE

NOTE: This section describes troubleshooting procedures in detail sufficient for a person with moderate technical ability to understand. However, for those interested in gaining more information on video game technology, especially the electronics, we recommend reading the **Video Game Operator's Handbook,** *manual no. TM-043. This book is available from Atari, Inc., attn. Customer Service Dept., 2175 Martin Avenue, Santa Clara, CA 95050 for $5.00 each, or from your distributor.*

6.1.1 IDENTIFYING THE TROUBLE AREA: The first troubleshooting step should be to note all observable trouble symptoms. Examples of symptoms are: depositing a coin produces no game response, no sound coming out of the speaker at any time, no picture on the TV screen. At the same time also note the game features that still work. A systematic way of checking game operation is to perform the functional check given in Section IV of this manual. Carefully train your eye to pick up all clues; by doing this an experienced troubleshooter can often spot the cause of a trouble even before he opens the cabinet.

Keeping these observations in mind, use the understanding of game operation gained from the theory of operation (Section III) and the schematic drawings (Section VII). Next narrow down the suspected cause of the trouble to a specific area or areas of the game: the coin mechanism, TV monitor, harness and front panel components (switches, lamps, speaker), electronics tray, printed circuit boards and power cord. Be careful not to overlook possible trouble areas that may seem too obvious: a power cord plug that has worked loose from the wall outlet and is no longer fully seated in the receptacle, or a rear panel access door that is not fully closed (thus causing the interrupt switch to block the AC power path to the game).

6.1.2 LOCATING THE TROUBLE CAUSE: Once a problem has been narrowed down to one or more areas, the next step is to perform various tests and measurements to isolate a specific cause of the trouble. Remember that sometimes a very complicated problem, such as erratic game operation, can be traced to a simple cause—the printed circuit board not being fully seated in its edge connector. Start with the most suspect area and trace backwards from the point where the trouble is first observable, using a process of elimination to eventually locate the faulty component, connection, etc. For example, if no sound is audible during game play, first check for a signal at the speaker leads. If no signal is present there, go back through the wiring harness connections to the printed circuit board. If there is still no signal, then systematically check back through the various components of the sound generation circuit.

Substitution of parts is a legitimate and easy way to isolate the cause. For instance, if the PCB is the suspected trouble area, remove it and substitute a known-to-be-good PCB. Then check for correct game operation. Similarly, to check the TV monitor, connect the game to a known-to-be-good monitor. The harness can often be checked by substitution also. Substitute both a known-to-be-good PCB and TV monitor. If the trouble still persists, the harness must be at fault.

While locating the trouble cause, use the technical descriptions in Section III as guides for correct circuit-level operation, and the schematic drawings of Section VII as roadmaps for tracing signal flow paths.

The test equipment for use in troubleshooting is discussed in paragraph 6.2.

6.1.3 CORRECTING THE TROUBLE CAUSE: In practice, the steps required to correct troubles can range from simple adjustments (fully seating the PCB in its edge connector, changing the setting on a potentiometer, adjusting the picture controls on the TV monitor) to repair of loose connections and replacement of defective parts. Extreme care should be exercised when removing integrated circuit devices and discrete components. Use a 40-watt soldering iron with a small tip designed especially for IC work. To remove an IC device, follow this procedure:

> Clip all leads and lift the IC package out, leaving two rows of leads. Then remove leads individually with a soldering iron and needle-nose pliers. Finally, evacuate the holes with a solder sucker. Afterwards clean the area thoroughly, using an approved PCB cleaning solution to remove any traces of flux and dirt. Alcohol will do in a pinch, if necessary.

Insert the new IC device using an IC insertion tool, making sure that the reference notch is oriented correctly and that the device's leads are not bent during insertion into the board. Afterwards, be sure to solder each lead on *both* sides of the PCB, using as little solder as possible. After soldering, clean the area thoroughly to remove the flux.

Observe the same removal and insertion procedures when replacing discrete components. Trim the leads as close as possible and be sure to orient diodes and capacitors correctly.

6.1.4 VERIFYING CORRECT GAME OPERATION: After locating and correcting the cause of a trouble, re-energize the game and perform a final check on correct game operation. Doing this will verify that your troubleshooting was correct. If the game operation is still not correct, go back and double-check your work. Make sure that any re-

placed components were installed correctly. If this was done properly, then start the troubleshooting steps over again. Keep in mind that there may be more than one trouble at a time, and that correcting one trouble can sometimes bring previously undetectable troubles to light.

This verification is especially important when the original trouble had been intermittent, that is, was not happening all the time.

6.2 TEST EQUIPMENT

Electronic troubleshooting of a video game essentially consists of checking for the presence of various signals and of examining their condition. A signal can be thought of as acting like a "messenger" that carries instructions from one unit or circuit to another. Many different types of signals are produced in a video game, and for this reason several unusual and perhaps unfamiliar types of test instruments are used during troubleshooting. Each instrument has its own set of advantages and disadvantages for examining a given type of signal, and both the depth of the intended troubleshooting capability and budget will determine what instruments will be needed. Some instruments are basic and essential, no matter what size of service facility, while other optional instruments are desirable because they make troubleshooting easier and quicker.

6.2.1 BASIC TEST EQUIPMENT:

(a) The Video Probe. This is a simple but invaluable instrument having two leads—a test-clip lead and a test-probe lead. During troubleshooting of video signals the test-clip lead is left connected to the game side of the video coupling capacitor. On the Quiz Show game this point is the junction of resistors R37, R38 and R39 at location J-6 on the PCB. When the test-probe lead is then connected to any video developmental signal, that signal will be coupled to the video signal going to the TV monitor and a video probe picture will appear on the TV screen. The shape and other characteristics of this picture will give information about the signal being probed. The video probe is suited for troubleshooting synchronization and image signals, but will not be useful for extremely fast signals (such as the clock) or for very slow analog or digital signals.

A video probe can be constructed in a few minutes from these common electrical components: a length of 20 AWG (American Wire Gauge) rubber-coated wire, a 4.7K-ohm, ¼-watt carbon resistor, and two test leads. For the leads, use a single Mouser test clip (Mouser # 131C 301 or 302) attached to one end of the wire, and a test prod containing the resistor on the other.

To assemble the video probe, proceed as follows: Remove the cap from the test clip and strip 3/16 inch off each end of the wire. Solder one end to the post in the test clip, thread the other end through the hole in the cap, and snap on the cap. Next unscrew the plastic body of the test prod from the point and trim both leads of the resistor to a 3/16-inch length. Solder one resistor lead to the inside of the point. Thread the other end of the wire through the hole in the body and solder it to the other resistor lead; screw the body back onto the point.

(b) The Logic Probe. This is a test instrument designed for fast verification of digital IC outputs. It is small, convenient to carry, easy to read, and relatively inexpensive. The logic probe derives its power from the system under test; it has two power leads, one for connection to ground and the other to +5 volts DC. When the logic probe's tip is held against a digital signal point, three colored lamps in the tip will indicate the signal's condition or state, as follows:

- The red lamp lit indicates a high or logic level 1 (for TTL components, this is +2.4 to +5 volts)
- The white lamp lit indicates a low or logic level 0 (for TTL components, this is 0 to +0.8 volt)
- The blue lamp lit indicates that the signal is changing states
- No lamps lit indicate the grey region between 0 and 1 (for TTL this is between +0.8 and +2.4 volts)

A circuit shorted to ground will illuminate the white lamp and an open circuit will illuminate the red lamp.

The logic probe is readily available from electronic supply sources; a commercial model found satisfactory is the Kurz-Kasch model LP 520.

(c) The Logic Pulser. This test instrument is similar in size and shape to the logic probe, and it also derives its power from the system under test. When the logic pulser's tip is held against a digital signal point, the source and sink capabilities of the pulser override any IC output and the point is driven to the opposite logic level. If the point that the logic pulser is held against is low, pressing the switch on the side of the pulser will introduce a high pulse. Conversely, pulsing a high line will pull that line low momentarily.

During troubleshooting the logic pulser allows stimulation of in-circuit ICs with a shaped digital pulse. For example, a certain feature of the game may not be working and you suspect that a circuit is not receiving the necessary signal. Use the pulser to imitate that signal: if the circuit begins working, you have proved that the signal was in fact missing and you can begin tracking it down. This technique is very similar to jumping coils in electromechanical games such as pinball machines.

In addition to the regular "pulse" button, there is another switch mounted on the logic pulser. When this switch is set in the "rep" mode, the instrument pulses the digital signal point at a 5-Hz rate or 5 times per second. This extremely low rate is slow enough to allow watching events initiated by the pulser. Counter outputs, for example, are more easily observed when the counter is pulsed or clocked at this rate.

The logic pulser is also readily available from electronic supply sources; a commercial model found satisfactory is the Kurz-Kasch model HL 583.

(d) Oscilloscope. The most versatile test instrument, and also the most expensive, is the oscilloscope. The high-speed TTL integrated circuits used in video games produce fast-rise-time signals. The oscilloscope should have a 50-MHz bandwidth, dual trace and dual time base capability. These latter features allow examination of both input and output signals simultaneously, so that precise timing relationships can be checked. The oscilloscope should also have provision for internal or external sync.

Of the newer, solid-state oscilloscopes, a satisfactory model is the Tektronix 465.

(e) VOM or Volt-Ohmmeter. This common measuring instrument is extremely useful in video game troubleshooting. It can be used to check line voltage, transformer secondary windings, continuity, resistance, power supply voltages, and to some extent used for measurements in the analog circuitry.

One commercial model found satisfactory is the Simpson 260.

6.2.2 OPTIONAL TEST EQUIPMENT:

(a) The Logic Comparator. This test instrument's main benefit is that it can be used to check the functioning of an integrated circuit device while the device is still in place on the printed circuit board. The logic comparator performs the check by comparing the suspect ICs functioning with that of an identical-type reference IC mounted in the instrument itself. Suppose that the functioning of a type-74193 device on the PCB is suspected to be defective. First insert a program card with a known-to-be-good 74193 into the logic comparator, and then clip the comparator test leads onto the leads of the suspect device. If there are any logic state differences between the reference IC and the suspect IC under test, then an LED on the logic comparator will light up to indicate which output is not functioning correctly. Once a defective IC has been located, it should be replaced.

Logic comparators are readily available from electronic supply sources.

(b) Atari Universal Test Fixture. In situations where a large number of video games are being serviced, investment in the Universal Test Fixture will be justified. This item of test equipment forms a test station for troubleshooting printed circuit boards after they have been removed from the game cabinet. The Universal Test Fixture has a full set of controls for operating the game and also has its own TV monitor. The game's PCB is plugged into an edge connector mounted on the side of the Fixture; with this arrangement the PCB is positioned in a convenient way for connecting probes and other test instruments.

A program card inserted into a receptacle in the top of Fixture takes the place of the game's interconnect wires. The program card thus sets up the Fixture for each particular game; the game's name is clearly printed on the program card itself.

With the Universal Test Fixture the method of troubleshooting via substitution of known-to-be-good parts is made fast and convenient. For example, suppose that the TV picture in a game is completely broken up and you want to determine whether the game or monitor is causing the problem. Remove the PCB and plug it into the Fixture's edge connector, and also insert the correct program card for that game. If the picture on the Fixture's monitor is correct, then you know that the problem lies in the game's monitor.

6.3 SPECIFIC TROUBLESHOOTING INFORMATION

The following subparagraphs give additional troubleshooting information about certain areas of the Quiz Show game.

6.3.1 COIN MECHANISM: If a player inserts a coin and the game does not respond, first check the coin mechanism. If pressing the coin rejector button forces the rejector mechanism to return the coin, then examine the coin to make sure that it is genuine. If it is, then use a set of your own test coins (which should include both very new and very old, worn coins) to determine whether or not the player's coin is undersize or underweight. If your test coins are also returned, this indicates that servicing of the coin acceptor portion of the coin mechanism is called for. Generally the cause of this particular problem is an improperly adjusted magnet gate.

Inside the coin mechanism a magnet is used to test the metallic composition of the coin. Highly magnetic coins, such as those made of steel or iron, will be retained by the magnet and can be returned by actuating the wiper operating lever. Coins having comparatively high magnetic properties will be slowed down by the magnet, and will drop off the end of the rail short of the "accept" entrance and be returned. Coins having little or no magnetic proper-

ties, such as brass or zinc coins, will pass through the magnetic field so fast that they will overshoot the "accept" entrance and be returned.

A magnetic gate adjusted with too large a gap may pass both genuine and counterfeit coins. An adjustment with too small a gap can lead to rejection of some or even all coins. Over a period of time, the screw that adjusts the magnet gate has a tendency to work loose, resulting in a gradual narrowing of the gate. At first, only the thickest (i.e., newest) coins are rejected. As time passes, more and more coins are rejected until finally player complaints lead to the calling of the game repairman.

If pressing the coin rejector button does not cause the coin to be returned, and if the game still does not respond, then check the coin mechanism to see if the coin is jammed inside.

If you are certain that the coin is genuine, and that the coin passes through the coin mechanism and into the cash box, then the lack of game response is probably due to some kind of electrical trouble. Check for signals at the electrical contacts of the coin mechanism before moving on to the harness and other parts of the circuitry.

6.3.2 TV MONITOR: The TV monitor is a self-contained unit housed in its own chassis. A trouble's cause may be narrowed down to the monitor—either by the substitution method using a known-to-be-good monitor, or by verifying presence of AC power to the monitor power supply and presence of the *correct* composite video signal. The entire monitor can then be removed from the game cabinet. Doing this facilitates troubleshooting steps, because all monitor components will then be accessible.

A schematic diagram of the monitor circuitry is included in Section VII of this manual. After disconnecting and removing the monitor from the game, standard TV troubleshooting techniques are adequate for locating causes of trouble. Additional servicing information is available from the monitor manufacturer (Motorola).

6.3.3 ANTENNA STATIC MODIFICATION: This subparagraph gives a procedure for modifying the antenna wire connected to pin M of printed circuit board I's edge connector. The antenna is part of the credit portion of the game circuitry. This static modification feature is included so that it will not be possible for a player to obtain bonus games (that is, game plays without having deposited money into the game) by inducing a static charge in the coin entrance plate or any other metal part of the game—provided that the antenna has been cut to optimum length.

The antenna is a wire approximately one foot long, with one end intentionally left not connected. When a static discharge occurs, an electric current is induced in this wire and an impulse is transmitted to the credit circuitry on PC Board I. This impulse resets the circuitry, turning off game credit and changing the game over to the attract mode. To test the static modification feature, touch the end of the antenna wire with your finger; the body usually has enough capacitance to trigger the circuitry. Sensitivity of the static modification feature can be adjusted by changing the length of the antenna wire. Lengthening the wire increases sensitivity, so that a lesser charge will turn off game credit. Cutting the wire shorter decreases sensitivity, so that a larger charge is required for triggering the circuit.

If there are problems with static charges accidentally shutting off the game credit, try cutting the wire shorter, in increments of ½ inch at a time. Be aware, however, that if the antenna wire is cut too short, players may be able to obtain free game credit (bonus games) by inducing a static charge in the game.

6.3.4 TAPE DECK: Suspect a trouble in the tape deck if the TV screen shows the correct pictures during the attract mode and during the initial portion of play mode, but then goes dark when it should be showing questions. First determine whether the magnetic tape in the tape cartridge has broken or become jammed. Do this by opening the rear panel, removing the tape cartridge from the tape deck, and examining the tape. If defective, the cartridge must be replaced.

If not defective, put the cartridge back and then check the electrical signals coming to the tape deck. Start with the connection from the AC Power Relay PCB (at pin 13 of the tape deck edge connector). (The AC Power Relay PCB is mounted on the electronics tray; its exact location is shown as item 14 on drawing number A005115 in Section VII of this manual. A schematic of this PCB is shown on drawing number 005249.) After confirming that the relay is operating correctly, go on to check the other signals coming to the tape deck from PCB I, PCB II and the AC connection from the power transformer on the electronics tray.

VII. SCHEMATICS, DRAWINGS & PARTS LISTS

A005120	Parts List and Drawing Top Assembly
A005117	Parts List and Drawing Plex Panel Control Assembly
A005114	Parts List and Drawing Control Panel Assembly
005129	Schematic Harness
A005115	Parts List and Drawing Electronics Tray Assembly
A005250	Schematic, Parts List and Drawing AC Power Relay Assembly
A005229	Schematic, Parts List and Drawing Printed Circuit Board I
A005231	Schematic, Parts List and Drawing Printed Circuit Board II
	Schematic Motorola XM501 Television Monitor

QUIZ SHOW

ATARI™ Innovative leisure

ASSEMBLY TITLE	QUIZ SHOW - TOP ASSEMBLY	P/L 005120

PARTS LIST SPECIFICATION — Page 1 of 1

Drawn			REV. C
Checked	3/19/76	Mech. Eng.	
Proj. Eng.	4/5/76	Elec. Eng	

Rev.	Description	Date	Apprv.	Rev.	Description	Date	Apprv.
A	PROD REL	3/22/76					
B	Rev per ECN 2324	3/25/76					
C	Rev per ECN 2377	4/5/76					

Item	Part Number	Qty.	DESCRIPTION
1	A005102	1	Cabinet Assembly
2	A004286-08	1	R.F. Shielding Box Enclosure Assy
3	A005115	1	Electronics Tray Assembly
4	A005117	1	Plex Control Panel Assembly
5	A005114	1	Control Panel Assembly
6	A003637-10	1	Coin Door Assembly
7	48-002	1	Speaker, 4" Motorola
8	000869	1	Speaker, Alum Mesh Cover
9	003920-02	1	Plexiglas Retainer, 30"
10	71-2114	1	Lock, with Off-Set Cam
11	92-006	1	Monitor, 19" Motorola
12	75-5124N	4	Carriage Bolts, #10-24 x 1.50
13	75-010S	21	Washer, Flat, #10
14	75-040	17	Washer, Lock, #10
15	75-911S	17	Hex Nuts, #10-24
16	75-5124B	13	Carriage Bolts, #10-24 x 1.50
17	72-6812	6	Screws, Self Tapping #8 x 3/4 Pan Hd. Philp.
18	005233	1	Rear Door Seal
19	A005231	1	Quiz Show Board II
20	A005191-01	1	Programmed Cartridge
21	75-931	4	Wing Nuts, #10 - 24 x 1", Blk. Oxide Finish
22	73-77004	4	Pop Rivets, 3/16 x .68 Lg.
23	005116	1	ABS Bezel
24	005127-XX	1	Shipping Container
25	005121	2	Side Panel S/Screen Graphics
26	TM-060	1	Techinal Manual
27	A005124	1	Main Harness
28	A005129	1	Wire Schematic
29	A005239	1	Decal Location Diagram, Assy
30	005254	1	Smoked Plexiglas
31	A004132-08	1	R.F. Shield P.C. Assembly
32	A005229	1	P.C.B. Assembly, Quiz Show
33	A005191-02	1	Cleaner, 8 Track Cartridge Tape

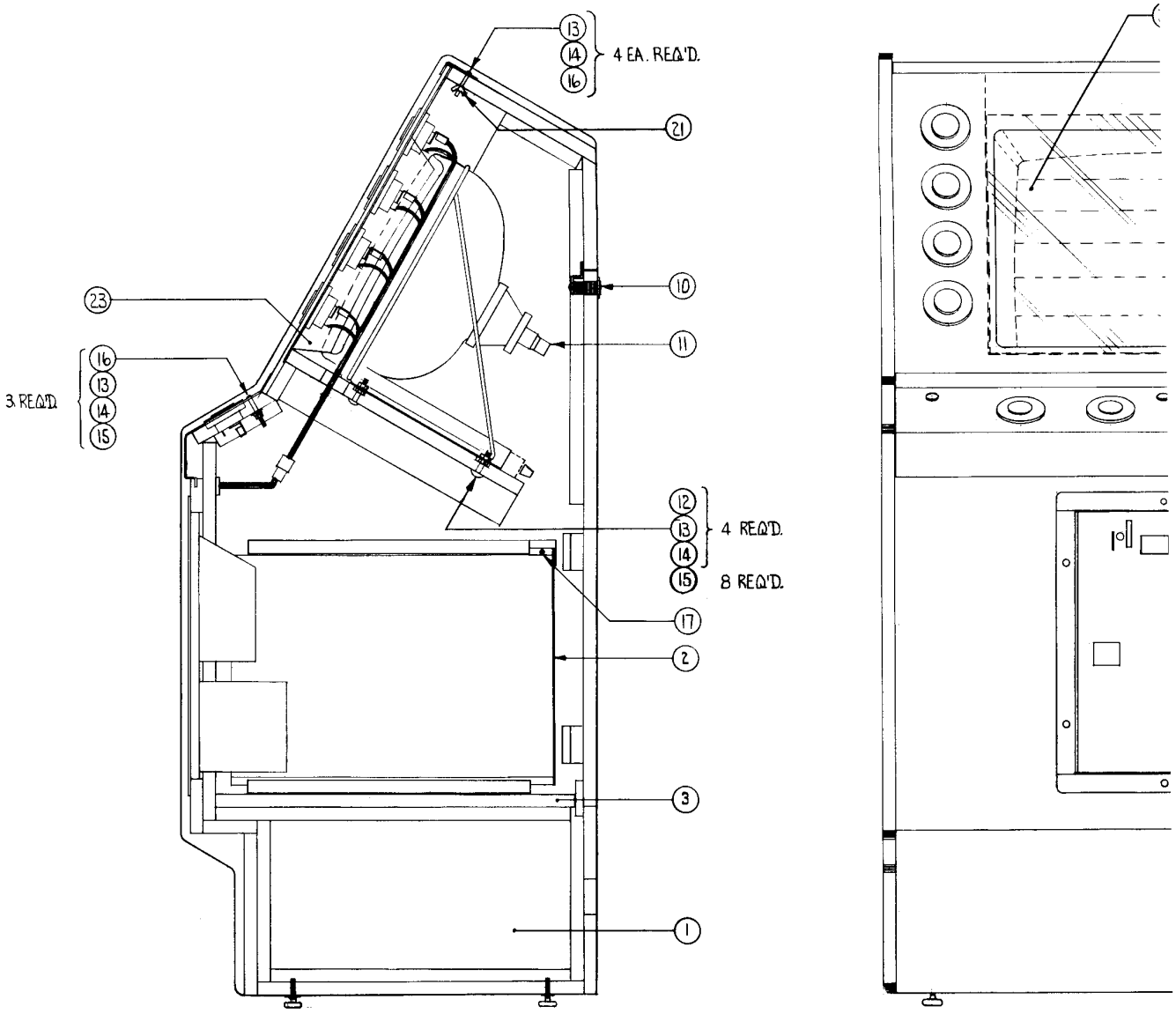

NOTE:
BOTH ITEMS 20 & 33 ARE TO BE SHIPPED WITH EACH GAME AND ARE TO BE WRAPPED IN BUBBLE PACKAGING MAT'L AND PLACED INSIDE COIN BOX, OF THE CASH DOOR ASS'Y.
NOTE: BOTH ITEMS *NOT SHOWN.*

NOTES: UNLESS OTHERWISE SPECIFIED

REVISIONS				
ZONE	SYM	DESCRIPTION	DATE	APPROVED
	A	PROD. REL.	3-18-76	
	B	REV PER ECN 2324	3-25-76	
	C	REV PER ECN 2377	4-5-76	

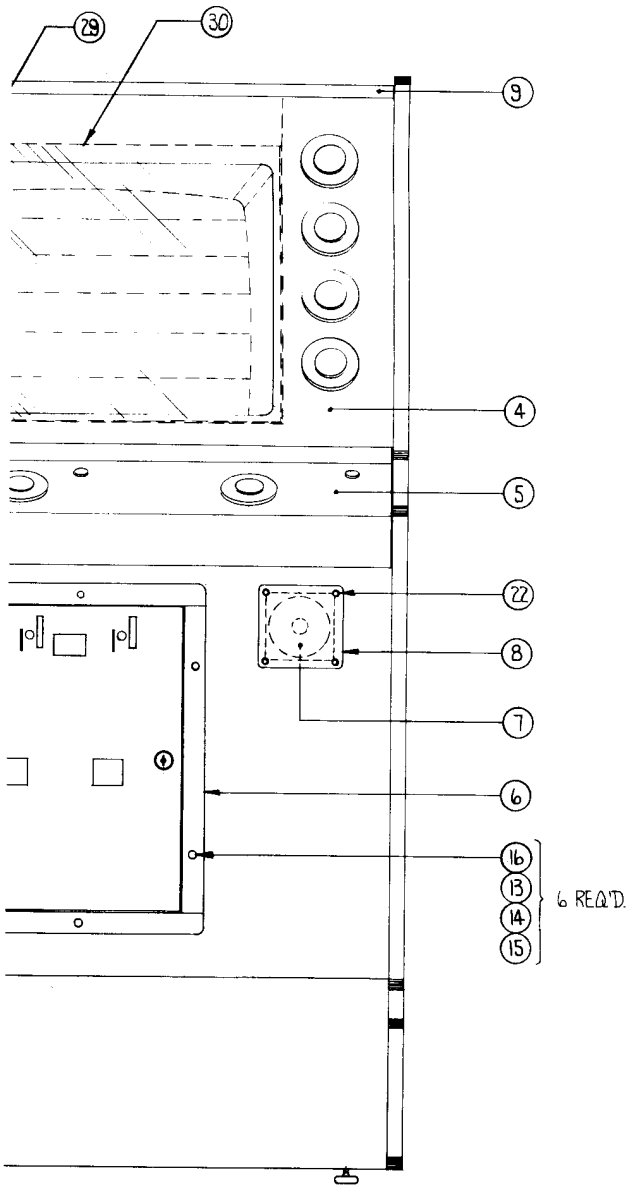

OUTSTANDING ECNs	

UNLESS OTHERWISE SPECIFIED DIMENSIONS ARE IN INCHES
TOLERANCES ON:
ANGLES = ±1°
SURFACE FINISH ✓
.x = ±.1
.xx = ± .01
.xxx = ± .010

MATERIAL: SEE PIL 005120

FINISH:

DO NOT SCALE DRAWING

DRAWN BY — DATE 1-27-76

CHECKED

ENGINEER

PROJECT ENGINEER

MFG ENGINEER

ATARI INCORPORATED
14600 Winchester Boulevard
Los Gatos, California 95030

TITLE: QUIZ SHOW-TOP ASSEMBLY

SIZE D | DRAWING NO A005120 | REV C

SHEET 1 OF 2

NEXT ASSY	USED ON
	QUIZ SHOW

APPLICATION

DRAWING NO. | SHEET | REV

QUIZ SHOW

ATARI™ Innovative leisure

ASSEMBLY TITLE / PLEX CONTROL PANEL ASSEMBLY **P/L** A005117

PARTS LIST SPECIFICATION Page 1 of 1

Drawn		
Checked	Mech. Eng.	
Proj. Eng. 3/19/76	Elec. Eng	REV. B

Rev.	Description	Date	Apprv.	Rev.	Description	Date	Apprv.
A	PROD REL	3-22-76					
B	Rev per ECN 2456	4-20-76					

Item	Part Number	Qty.	DESCRIPTION
1	005122-01	1	Plex Panel with Graphics (See DWG No. 005122-02)
2	A004304-01	2	Yellow Lite Button Assy
3	A004304-03	2	Blue " " "
4	A004304-04	2	Purple " " "
5	A004304-05	2	Amber " " "
6	A005126	2	Harness, Answer Panel
7			

REVISIONS				
ZONE	SYM	DESCRIPTION	DATE	APPROVED
	A	PROD. REL	3-18-76	
	B	REV. PER ECN 2456	4-20-76	

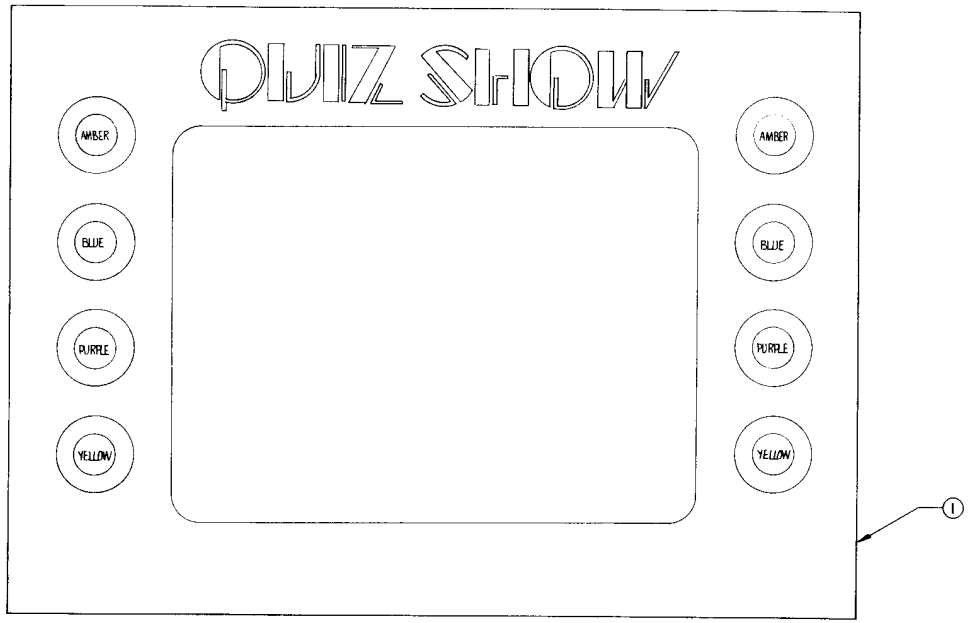

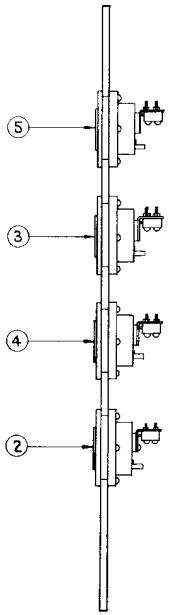

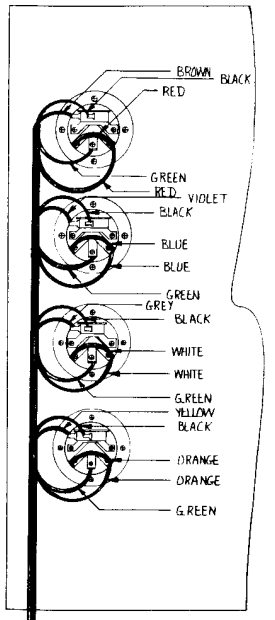

6
2 REQ'D

TO MAIN HARNESS

OUTSTANDING ECNs	

NOTES UNLESS OTHERWISE SPECIFIED

UNLESS OTHERWISE SPECIFIED DIMENSIONS ARE IN INCHES TOLERANCES ON
ANGLES ± 1°
SURFACE FINISH

DO NOT SCALE DRAWING

DRAWN BY
DATE 1-26-76
CHECKED
ENGINEER
PROJECT ENGINEER

MATERIAL SEE PIL 005117
FINISH

ATARI INCORPORATED
14600 Winchester Boulevard
Los Gatos, California 95030

TITLE PLEX. PANEL CONTROL ASSY.

SIZE D | DRAWING NO A005117 | REV B
SHEET OF

NEXT ASSY	USED ON
A005120	QUIZ SHOW
APPLICATION	

QUIZ SHOW

ATARI™ Innovative leisure

ASSEMBLY TITLE / ALUM. CONTROL PANEL ASSY **P/L** A005114

PARTS LIST SPECIFICATION Page 1 of 1

Drawn			REV. B
Checked	3/19/76	Mech. Eng.	
Proj. Eng.	3/19/76	Elec. Eng	

Rev.	Description	Date	Apprv.	Rev.	Description	Date	Apprv.
A	PROD REL	3/22/76					
B	Rev per ECN 2306	3/23/76					

Item	Part Number	Qty.	DESCRIPTION
1	005123	1	Alum. Control Panel
2	A004304-07	1	One Player Start Button Assy
3	A004304-08	1	Two Player Start Button Assy
4	A004304-06	1	Category Start Button Assy
5	A005125	1	Harness, Control Panel

REVISIONS				
ZONE	REV	DESCRIPTION	DATE	APPROVED
	A	PROD. RELEASE	3-17-76	
	B	REV PER ECN 2306	3-23-76	

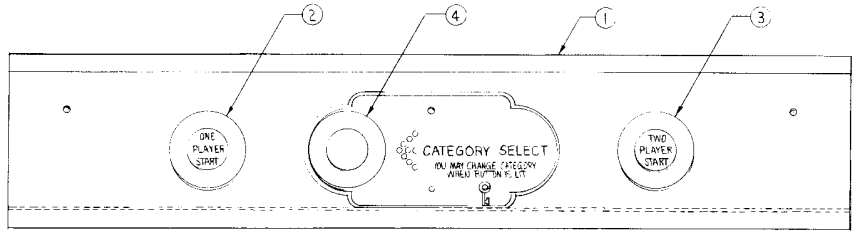

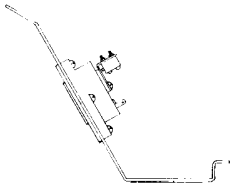

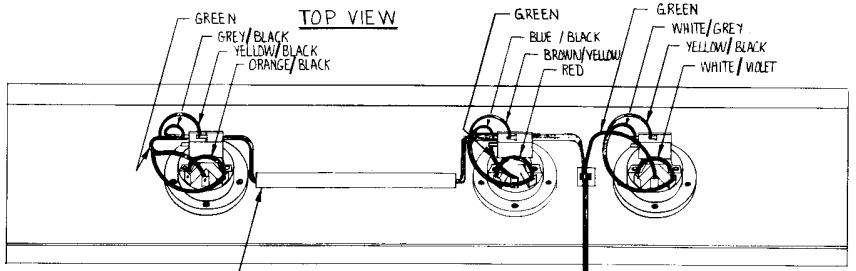

BOTTOM VIEW

NOTE:
MASKING TAPE REQ'D. TO HOLD WIRES IN PLACE ON CONTROL PANEL

TO MAIN HARNESS

OUTSTANDING ECNs	

NOTES: UNLESS OTHERWISE SPECIFIED

A005120	AUTO SHOW
NEXT ASSY	USED ON
APPLICATION	

UNLESS OTHERWISE SPECIFIED DIMENSIONS ARE IN INCHES
TOLERANCES ON
ANGLES ± 1°
SURFACE FINISH .x ± .03 .xx ± .010 .xxx ± .010

MATERIAL: SEE PIL. 005114

FINISH:

DO NOT SCALE DRAWING

DRAWN BY | DATE: 1-26-76

CHECKED

ENGINEER

PROJECT ENGINEER

MFG ENGINEER

ATARI

ATARI INCORPORATED
14600 Winchester Boulevard
Los Gatos, California 95030

TITLE: CONTROL PANEL ASS'Y.

SIZE: D | DRAWING NO: A005114 | REV: B

SHEET | OF

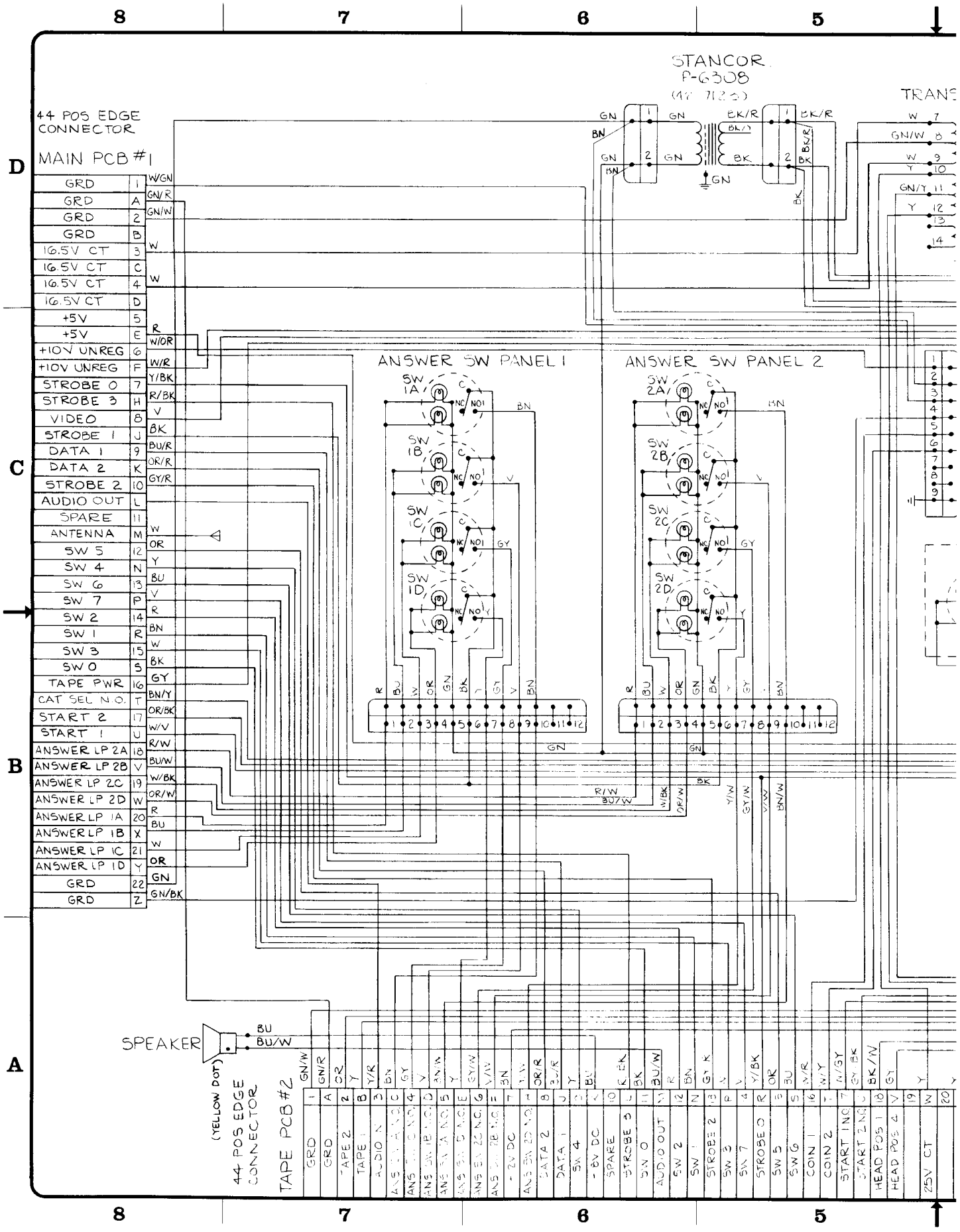

STANCOR
P-6308
TRANS
44 POS EDGE CONNECTOR
MAIN PCB #1
GRD 1 W/GN
GRD A GN/R
GRD 2 GN/W
GRD B
16.5V CT 3 W
16.5V CT C
16.5V CT 4 W
16.5V CT D
+5V 5
+5V E R
+10V UNREG 6 W/OR
+10V UNREG F W/R
STROBE 0 7 Y/BK
STROBE 3 H R/BK
VIDEO 8 V
STROBE 1 J BK
DATA 1 9 BU/R
DATA 2 K OR/R
STROBE 2 10 GY/R
AUDIO OUT L
SPARE 11
ANTENNA M W
SW 5 12 OR
SW 4 N Y
SW 6 13 BU
SW 7 P V
SW 2 14 R
SW 1 R BN
SW 3 15 W
SW 0 S BK
TAPE PWR 16 GY
CAT SEL N.O. T BN/Y
START 2 17 OR/BK
START 1 U W/V
ANSWER LP 2A 18 R/W
ANSWER LP 2B V BU/W
ANSWER LP 2C 19 W/BK
ANSWER LP 2D W OR/W
ANSWER LP 1A 20 R
ANSWER LP 1B X BU
ANSWER LP 1C 21 W
ANSWER LP 1D Y OR
GRD 22 GN
GRD Z GN/BK
ANSWER SW PANEL 1
ANSWER SW PANEL 2
SW 1A
SW 1B
SW 1C
SW 1D
SW 2A
SW 2B
SW 2C
SW 2D
SPEAKER
(YELLOW DOT)
44 POS EDGE CONNECTOR
TAPE PCB #2
GRD
GRD
TAPE 2
TAPE 1
AUDIO IN
DATA 2
DATA 1
SW 4
-8V DC
SPARE
STROBE 3
SW 0
AUDIO OUT
SW 2
SW 1
STROBE 2
SW 3
SW 7
STROBE 0
SW 5
SW 6
COIN 1
COIN 2
START 1 NO
START 2 NO
HEAD POS 1
HEAD POS 4
25V CT

ANS 001551

REVISIONS				
SYM	DESCRIPTION	INITIALS and DATE		
		DRFTG	CHECK	ENGRG
A	PROD REL			
B	REV PER ECN 2398			

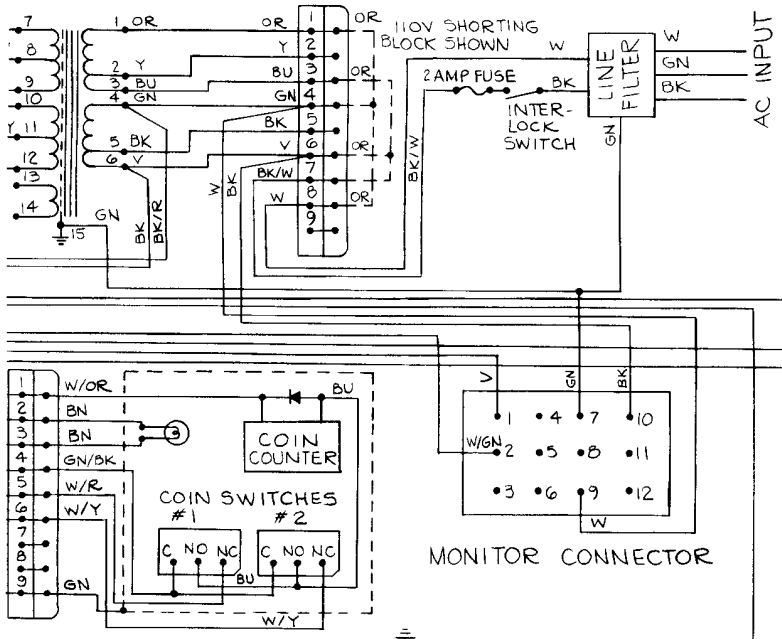

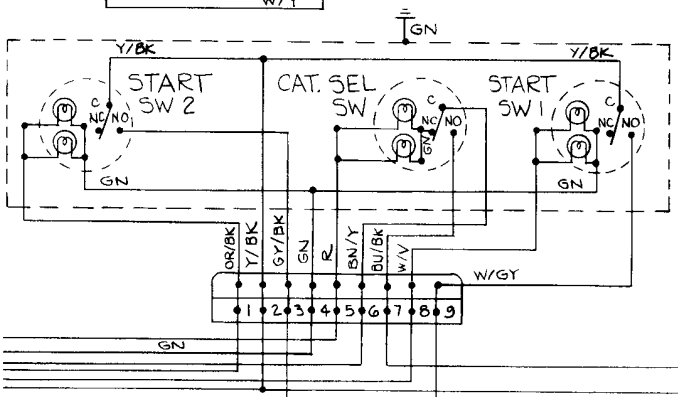

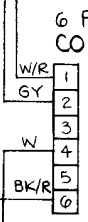

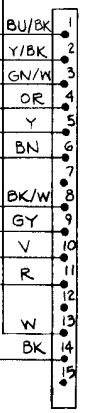

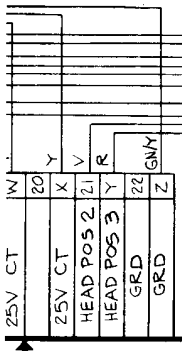

NEXT ASSY	USED ON	
APPLICATION		

INTERPRET THIS DRAWING PER USASI Y14.5

UNLESS OTHERWISE SPECIFIED DIMENSIONS ARE IN INCHES
TOLERANCES ON:
FRACTIONS = ±1/16 .x = ±.1
ANGLES = ±1° .xx = ±.03
SURFACE FINISH ✓ .xxx = ±.010

MATERIAL:

DRAWN BY	DATE 3/8/76
CHECKED	
DESIGN ENGINEER	
PROJECT ENGINEER	
DOCUMENT CONTROL	
APPROVED	

ATARI INCORPORATED
14600 Winchester Boulevard
Los Gatos, California 95030

TITLE QUIZ SHOW HARNESS SCHEMATIC

SIZE	DRAWING NO.	REV
D	005129	B

SCALE | SHEET 1 OF 1

DRAWING NO. 005129 | SHEET 1 | REV B

QUIZ SHOW

ATARI™ Innovative leisure

ASSEMBLY TITLE / ELECTRONICS TRAY ASSEMBLY P/L A005115

PARTS LIST SPECIFICATION Page 1 of 1

Drawn		
Checked	Mech. Eng.	
Proj. Eng.	Elec. Eng	REV. C

Rev.	Description	Date	Apprv.	Rev.	Description	Date	Apprv.
A	PROD REL	3/3/76					
B	Rev per ECN 2373	4/1/76					
C	Rev per ECN 2428	4/15/76					

Item	Part Number	Qty.	DESCRIPTION
1	005112-01	1	Tray Electronics
2	A005124-01	1	Main Harness
3	A005404-01	1	Transformer (Stancor P6308) Assy
4	001551-01	1	Transformer (001551)
5	A005242-01	1	Tape Deck Assy
6	A004381-01	1	Power Cord 8' Assembly
7	005260-01	1	Cover, AC Power
8	79-3201	1	Fuse Holder
9	46-201201	1	Fuse, 2 Amp, Slo Blo
10	41-2001	1	Filter Power Line
11	68-001	1	AC Power Interlock Switch
12	000268-01	1	Bracket, Switch Mounting
13	A004577-17	1	Interlock Switch Jumper
14	A005249-01	1	PC Board
15	78-70101SC	3	Bracket, PC Board Mounting
16	A001921-01	A/R	Shorting Block, 95V
17	A001921-02	A/R	Shorting Block, 110V
18	A001921-03	A/R	Shorting Block, 220V H
19	A001921-04	A/R	Shorting Block, 220V L
20	A004577-16	1	Fuse Jumper Harness
21	72-6608	11	Screw, SM, Pan Hd, Phil #6 x ½ Lg
22	72-6612	8	Screw, SM, Pan Hd, Phil #6 x 3/4 Lg
23	72-6812	12	Screw, SM, Pan Hd, Phil #8 x 3/4 Lg
24	72-148S	2	Screw, SM, Pan Hd, Phil #4 x ½ Lg
25	75-914S	2	Nut, Mach, Hex
26	75-054	2	Lock Washer, Steel
27	000871-01	1	Label
28	78-25001	1	Screw Down Tie Wrap
29	005497-01	1	Transformer End Cover

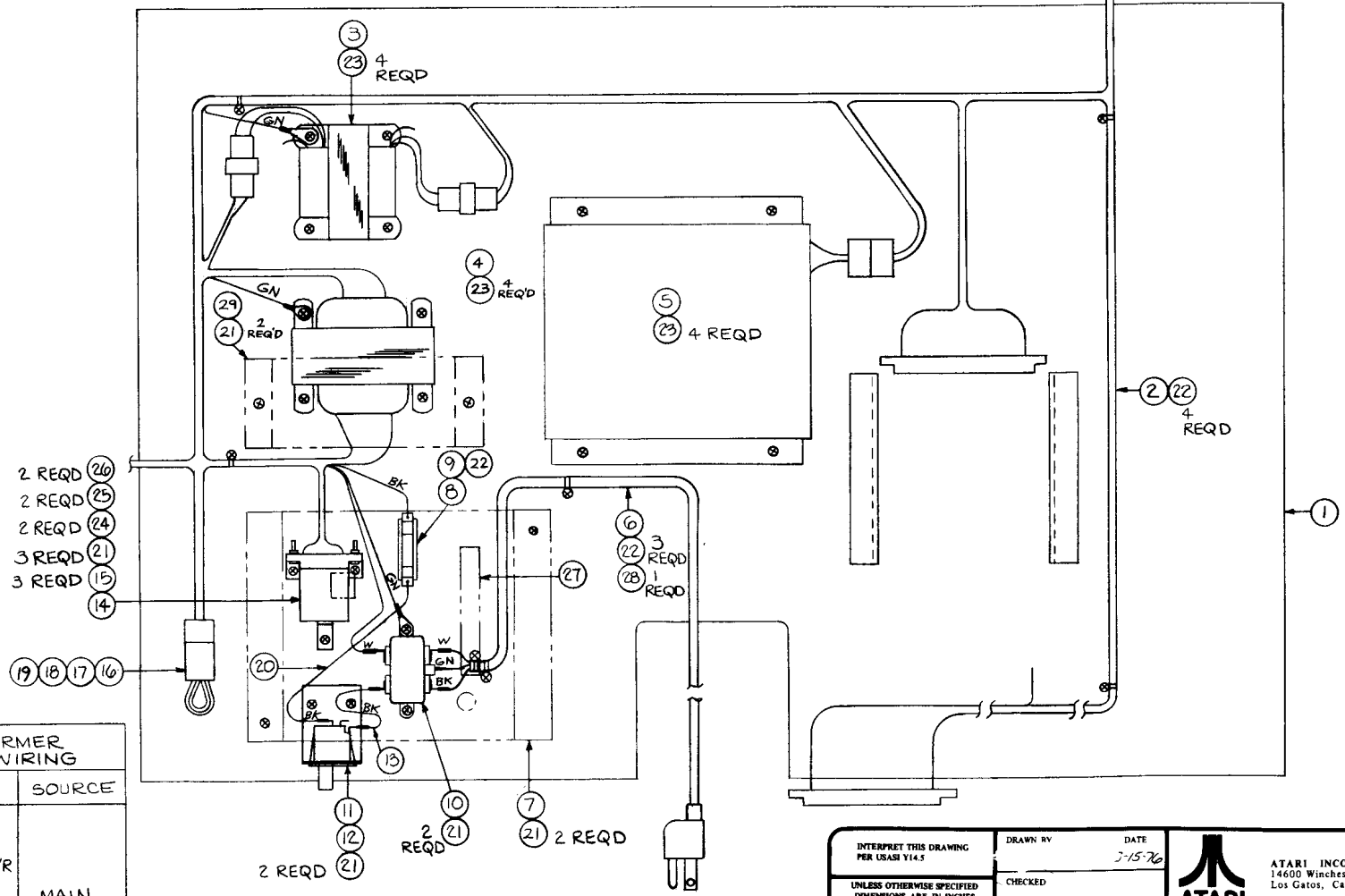

TRANSFORMER 001551 WIRING		
PIN NO.	COLOR	SOURCE
1	OR	MAIN HARNESS
2	Y	
3	BU	
4	GN & BK/R	
5	BK	
6	V & B	
7	W	
8	GN/W	
9	W	
10	Y	
11	GN/Y	
12	Y	
13	BN	
14	BN	
15	GN	

REVISIONS				
SYM	DESCRIPTION	INITIALS and DATE		
		DRFTG	CHECK	ENGRG
A	PROD REL 3/31/76			
B	REV PER ECN 2313 4/9/76			
C	REV PER ECN 2428 4/15/76			

DRAWING NO.
SHEET
REV

INTERPRET THIS DRAWING PER USASI Y14.5

UNLESS OTHERWISE SPECIFIED DIMENSIONS ARE IN INCHES TOLERANCES ON:
FRACTIONS = ±1/16 .x = ±.1
ANGLES = ±1° .xx = ±.03
SURFACE FINISH ✓ .xxx = ±.010

MATERIAL:

NEXT ASSY. | USED ON
APPLICATION

DRAWN BY DATE 3-15-76
CHECKED
DESIGN ENGINEER
PROJECT ENGINEER
DOCUMENT CONTROL
APPROVED

ATARI INCORPORATED
14600 Winchester Boulevard
Los Gatos, California 95030

TITLE QUIZ SHOW ELECTRONICS TRAY ASSEMBLY

SIZE C | DRAWING NO. A005115 | REV C

SCALE HALF SIZE | SHEET / OF /

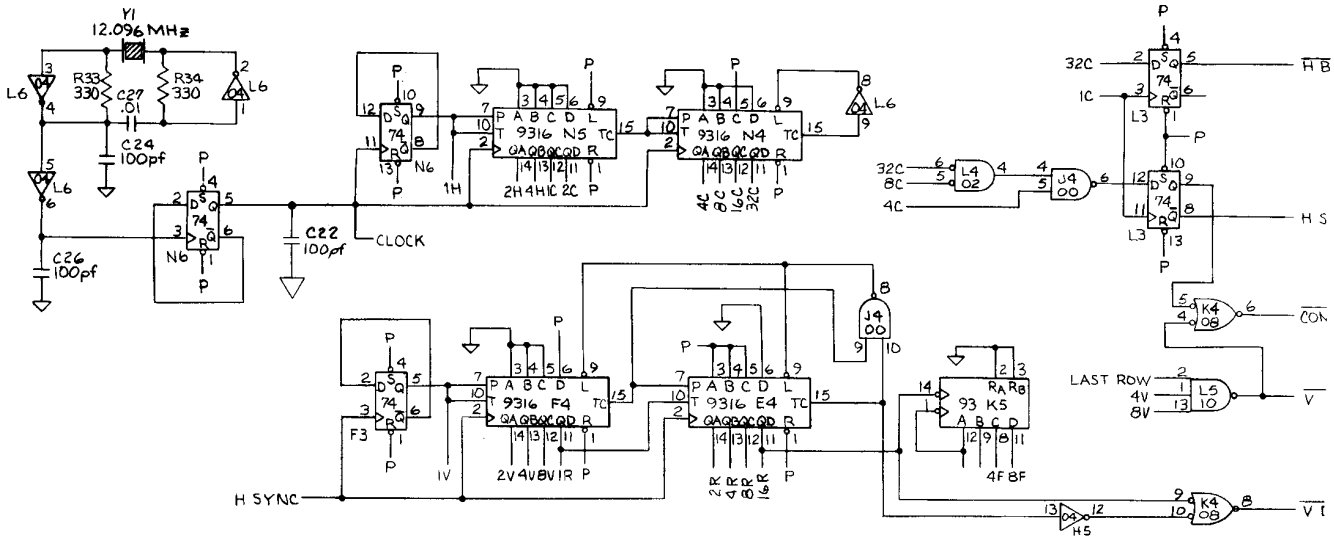

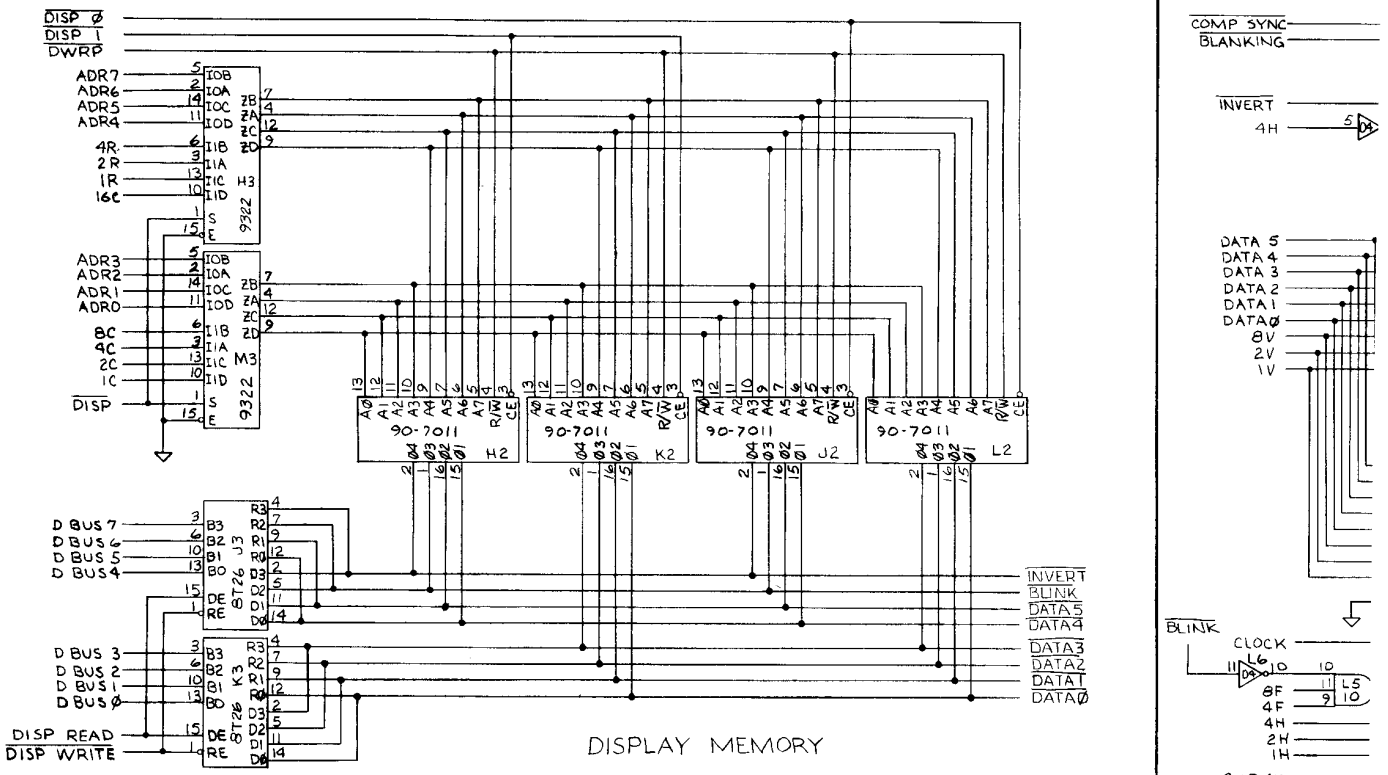

DISPLAY MEMORY

VIDEO

REVISIONS				
SYM	DESCRIPTION	INITIALS and DATE		
		DRFTG	CHECK	ENGRG
A	PRODUCTION RELEASE			

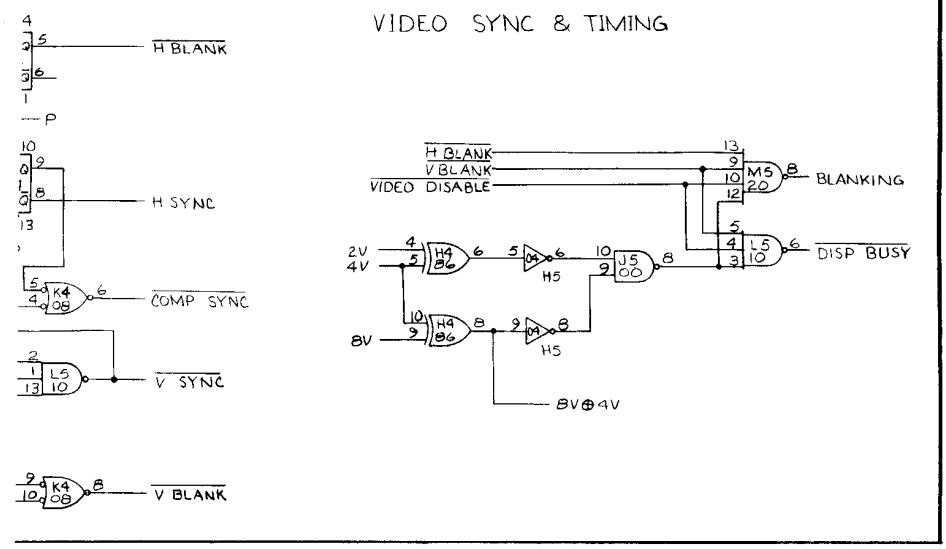

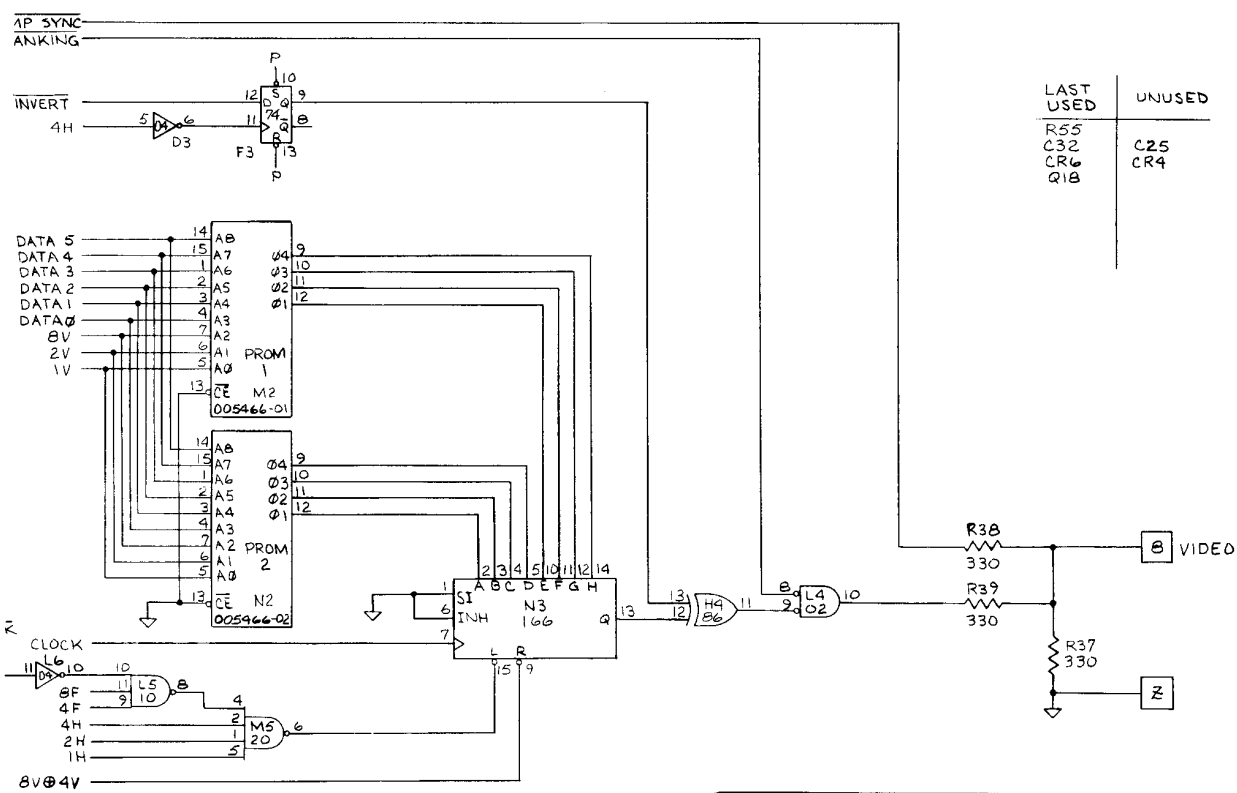

LAST USED	UNUSED
R55	
C32	C25
CR6	CR4
Q18	

VIDEO CHARACTER GENERATOR

INTERPRET THIS DRAWING PER USASI Y14.5

UNLESS OTHERWISE SPECIFIED DIMENSIONS ARE IN INCHES TOLERANCES ON:
FRACTIONS = ±1/16 .x = ±.1
ANGLES = ±1° .xx = ±.03
SURFACE FINISH ✓ .xxx = ±.010

MATERIAL:

NEXT ASSY	USED ON
	QUIZ SHOW

APPLICATION

DRAWN BY — DATE 3/10/76
CHECKED
DESIGN ENGINEER
PROJECT ENGINEER APR 76
DOCUMENT CONTROL
APPROVED

ATARI INCORPORATED
14600 Winchester Boulevard
Los Gatos, California 95030

TITLE: SCHEMATIC, QUIZ SHOW BD I

SIZE D — DRAWING NO. 005229 — REV A
SCALE — SHEET 1 OF 3

DRAWING NO. 005229 — SHEET 1 — REV 1

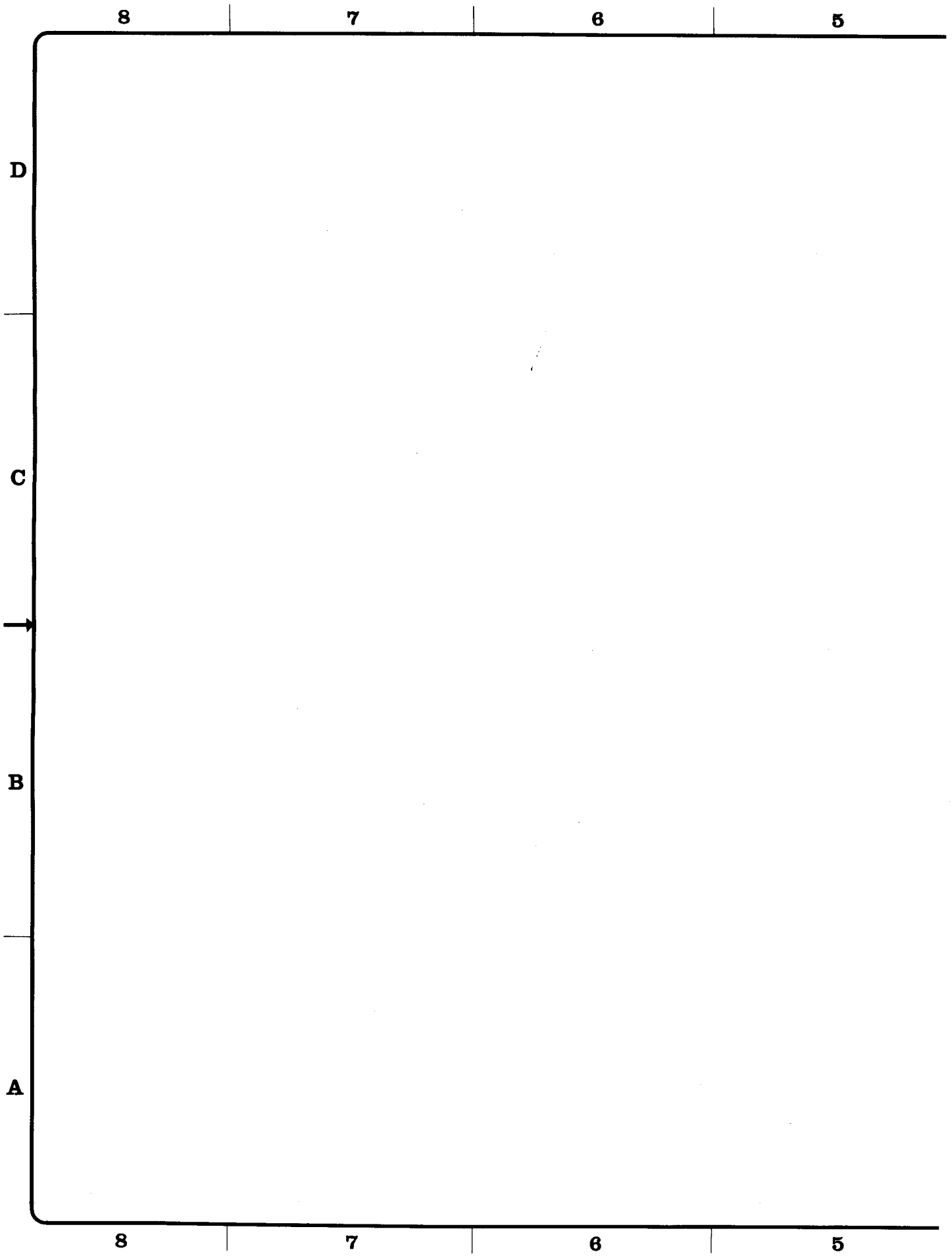
8
7
6
5
D
C
B
A
8
7
6
5

REVISIONS				
SYM	DESCRIPTION	INITIALS and DATE		
		DRFTG	CHECK	ENGRG
	SEE SHEET ONE			

NOTE:

THE INFORMATION ON THIS SHEET WAS NOT REPRODUCED BECAUSE IT COVERS CIRCUITRY THAT IS NOT OPERATOR-REPAIRABLE.

DRAWING NO. 005229 | SHEET 2 | REV 1

INTERPRET THIS DRAWING PER USASI Y14.5

UNLESS OTHERWISE SPECIFIED DIMENSIONS ARE IN INCHES
TOLERANCES ON:
FRACTIONS = ±1/16 .x = ±.1
ANGLES = ±1° .xx = ±.03
SURFACE FINISH √ .xxx = ±.010

MATERIAL:

DRAWN BY DATE
CHECKED
DESIGN ENGINEER
PROJECT ENGINEER
DOCUMENT CONTROL
APPROVED

NEXT ASSY	USED ON
	QUIZ SHOW

APPLICATION

ATARI INCORPORATED
14600 Winchester Boulevard
Los Gatos, California 95030

TITLE
SCHEMATIC,
QUIZ SHOW BD I

SIZE	DRAWING NO.	REV
D	005229	A

SCALE | SHEET 2 OF 3

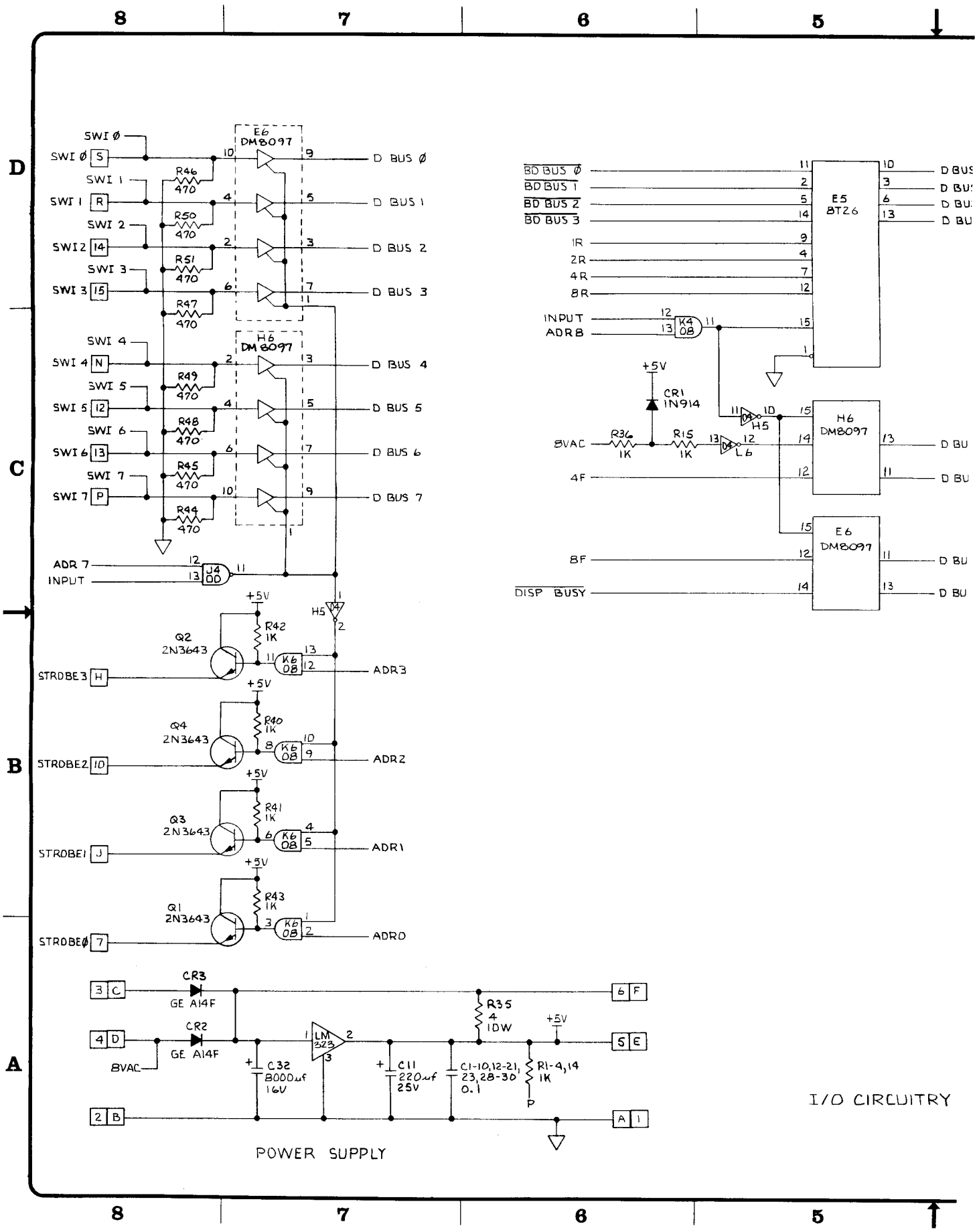
8
7
6
5
D
C
B
A
SWI Ø
SWI 1
SWI 2
SWI 3
SWI 4
SWI 5
SWI 6
SWI 7
E6 DM8097
H6 DM8097
R46 470
R50 470
R51 470
R47 470
R49 470
R48 470
R45 470
R44 470
D BUS Ø
D BUS 1
D BUS 2
D BUS 3
D BUS 4
D BUS 5
D BUS 6
D BUS 7
ADR 7
INPUT
J4 00
H5
+5V
Q2 2N3643
Q4 2N3643
Q3 2N3643
Q1 2N3643
R42 1K
R40 1K
R41 1K
R43 1K
K6 08
STROBE3
STROBE2
STROBE1
STROBEØ
ADR3
ADR2
ADR1
ADRO
CR3
CR2
GE A14F
BVAC
C32 8000uf 16V
LM 323
C11 220uf 25V
C1-10,12-21, 23,28-30 0.1
R35 4 10W
R1-4,14 1K
POWER SUPPLY
BD BUS Ø
BD BUS 1
BD BUS 2
BD BUS 3
1R
2R
4R
8R
INPUT
ADR B
E5 BT26
K4 08
CR1 IN914
R36 1K
R15 1K
L6
4F
8F
DISP BUSY
H6 DM8097
E6 DM8097
I/O CIRCUITRY

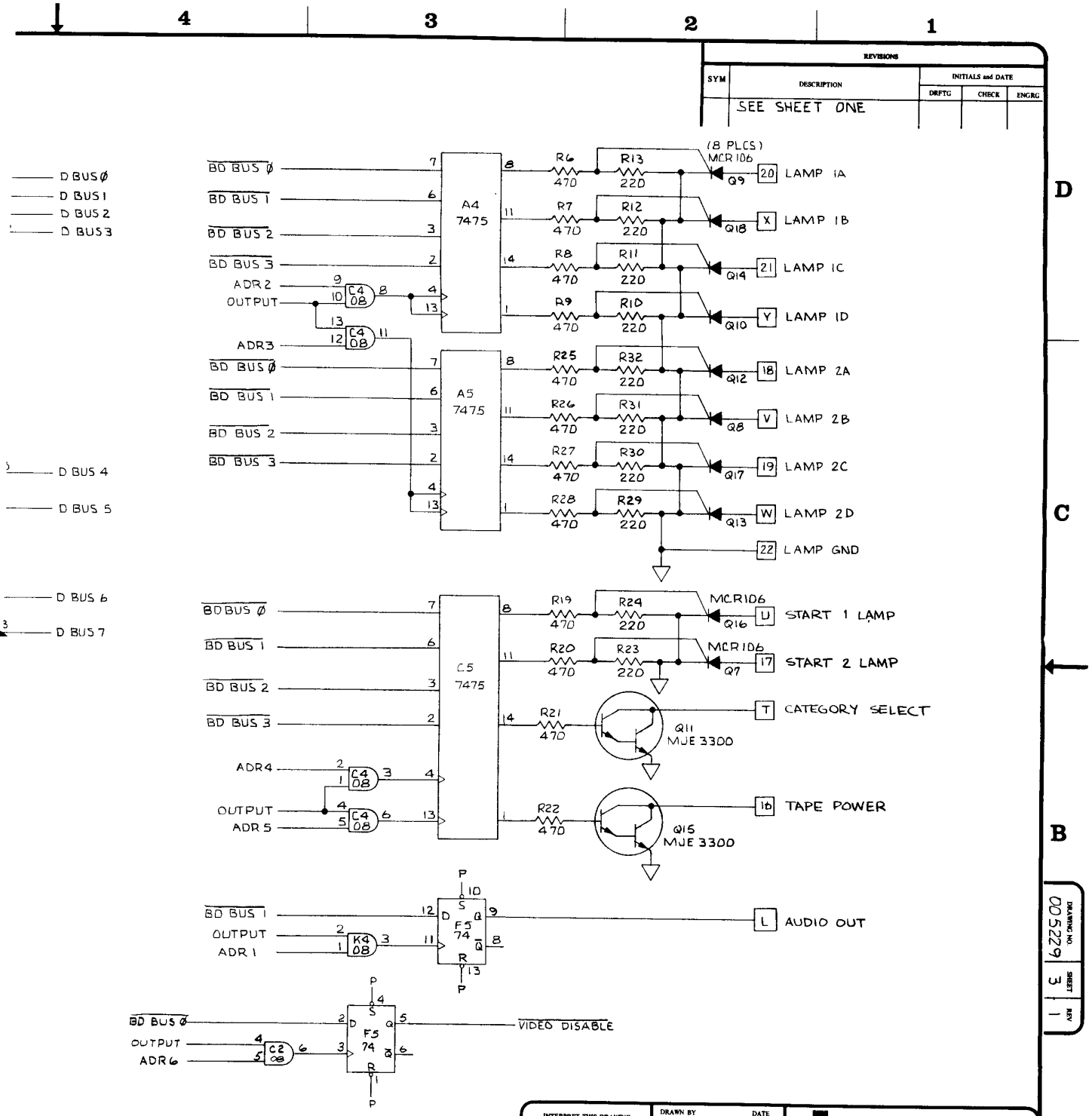
REVISIONS
SYM
DESCRIPTION
INITIALS and DATE
DRFTG
CHECK
ENGRG
SEE SHEET ONE
D BUS Ø
D BUS 1
D BUS 2
D BUS 3
D BUS 4
D BUS 5
D BUS 6
D BUS 7
BD BUS Ø
BD BUS 1
BD BUS 2
BD BUS 3
ADR2
OUTPUT
ADR3
A4 7475
A5 7475
C5 7475
C4 08
R6 470
R7 470
R8 470
R9 470
R13 220
R12 220
R11 220
R10 220
(8 PLCS) MCR 106
Q9
Q18
Q14
Q10
20 LAMP 1A
X LAMP 1B
21 LAMP 1C
Y LAMP 1D
R25 470
R26 470
R27 470
R28 470
R32 220
R31 220
R30 220
R29 220
Q12
Q8
Q17
Q13
18 LAMP 2A
V LAMP 2B
19 LAMP 2C
W LAMP 2D
22 LAMP GND
R19 470
R20 470
R24 220
R23 220
MCR106
Q16
Q7
U START 1 LAMP
17 START 2 LAMP
ADR4
OUTPUT
ADR5
R21 470
Q11 MJE 3300
T CATEGORY SELECT
R22 470
Q15 MJE 3300
16 TAPE POWER
BD BUS 1
OUTPUT
ADR1
K4 08
F5 74
L AUDIO OUT
BD BUS Ø
OUTPUT
ADR6
C2 08
VIDEO DISABLE
:CUITRY
INTERPRET THIS DRAWING PER USASI Y14.5
UNLESS OTHERWISE SPECIFIED DIMENSIONS ARE IN INCHES TOLERANCES ON:
FRACTIONS ±1/16 x ±.1
ANGLES ±1° xx ± .03
SURFACE FINISH √ xxx ± .010
MATERIAL:
DRAWN BY
DATE 3/10/76
CHECKED
DESIGN ENGINEER
PROJECT ENGINEER APR 76
DOCUMENT CONTROL
APPROVED
ATARI
ATARI INCORPORATED
14600 Winchester Boulevard
Los Gatos, California 95030
TITLE
SCHEMATIC, QUIZ SHOW BD 1
SIZE D
DRAWING NO. 005229
REV A
SCALE
SHEET 3 OF 3
NEXT ASSY
USED ON
QUIZ SHOW
APPLICATION
DRAWING NO. 005229
SHEET 3
REV 1

QUIZ SHOW

ATARI™ Innovative leisure

ASSEMBLY TITLE / QUIZ SHOW BD. I P.C. ASSY.	P/L A005229-01

PARTS LIST SPECIFICATION — Page 1 of 3

Drawn		
Checked	Mech. Eng.	
Proj. Eng	Elec. Eng	REV. A

Rev.	Description	Date	Apprv.	Rev.	Description	Date	Apprv.
A	PROD. REL.	4/2/76					

Item	Part Number	Qty.	DESCRIPTION	
1	005230-01	1	Printed Circuit Board	
2	10-5102	11	Res, Carbon, 5%, ¼W, 1K OHM	R1-4, 14, 15, 36, 40-43
3	10-5103	3	" " " " 10K OHM	R16, 17, 55
4	10-5153	1	" " " " 15K OHM	R53
5	10-5221	10	" " " " 220 OHM	R10-13,23,24, 29-32
6	10-5331	5	" " " " 330 OHM	R33,34,37-39
7	10-5333	1	" " " " 33K OHM	R52
8	10-5471	20	" " " " 470 OHM	R6-9,19-22, 25-28,44-51
9	10-5472	1	" " " " 4.7K OHM	R54
10	10-5473	1	" " " " 47K OHM	R5
11	10-5474	1	" " " " 470K OHM	R18
12	19-805W4p0	1	Res, Carbon, 5%, 10W, 4 OHM	R35
13	24-250227	1	Cap, Electrolytic, 220uf, 25VDC	C11
14	24-160808	1	" " 8000uf, 16VDC	C32
15	27-250103	1	Cap, Ceramic Disc, .01uf, 25VDC	C27
16	27-250104	25	" " " .1uf, 25VDC	C1-10,12-21, 23,28-31
17	28-101101	3	Cap, Silver Mica, 100pf, 100VDC	C22,24,26
18	31-A14F	2	Diode - A14F	CR2,3
19	31-1N914	3	Diode - 1N914	CR1,5,6
20	33-2N3644	1	Transistor - 2N3644	Q6
21	34-2N3643	5	Transistor - 2N3643	Q1-5
22	34-MJE3300	2	Transistor - MJE3300	Q11,15
23	35-MCR106	10	Transistor - MCR106	Q7-10,12-14, 16-18

*

ASSEMBLY TITLE QUIZ SHOW BD. 1 P.C. ASSY. P/L A005229-01

PARTS LIST SPECIFICATION REV A

Item	Part Number	Qty.	DESCRIPTION	
24	37-7400	2	I.C. 7400	J4,J5
25	37-7402	1	I.C. 7402	L4
26	37-7404	3	I.C. 7404	D3,H5,L6
27	37-7408	6	I.C. 7408	A2,B2,C2,C4,K4, K6
28	37-7410	1	I.C. 7410	L5
29	37-7420	1	I.C. 7420	M5
30	37-7474	4	I.C. 7474	F3,L3,F5,N6
31	37-7475	3	I.C. 7475	A4,A5,C5
32	37-7486	1	I.C. 7486	H4
33	37-7493	1	I.C. 7493	K5
34	37-74164	1	I.C. 74164	M4
35	37-74166	1	I.C. 74166	N3
36	37-8T26	3	I.C. 8T26	J3,K3,E5
37	37-DM8097	2	I.C. DM8097	E6,H6
38	90-6006	1	I.C.	B3
39	90-7011	4	I.C.	H2,J2,K2,L2
40	37-9301	1	I.C. 9301	D2
41	37-9316	4	I.C. 9316	E4,F4,N4,N5
42	37-9322	2	I.C. 9322	H3,M3
43	37-4001	1	I.C. 4001	D4
44	37-LM323	1	Regulator, LM323	
45	72-1406C	12	Screw, Pan Hd, Phil, 4-40 x 3/8" LG CRES	
46	72-1608C	2	Screw, Pan Hd, Phil, 6-32 x ½" LG CRES	
47	75-014S	12	Washer, Flat, Reg. Pattern #4, Steel	
48	75-016S	2	Washer, Flat, Reg. Pattern #6 Steel	
49	75-054	12	Washer, Lock, Int. Star, #4	
50	75-056	2	Washer, Lock, Int. Star, #6	
51	75-914C	12	Nut, Hex, #4-40, CRES	
52	75-916C	2	Nut, Hex, #6-32, CRES	
53	79-42540	1	Socket, 40-Pin Insert	B3
54	79-42524	6	Socket, 24-Pin Insert	A1,C1,D1,F1,H1,K1
55	90-102	1	Crystal, 12.096 MHZ	Y1
56	005464-01	1	PROM A 512 x 8 (4K) (82S115)	A1
57	005464-02	1	" B " " "	C1
58	005464-03	1	" C " " "	D1
59	005464-04	1	" D " " "	F1

*

ASSEMBLY TITLE QUIZ SHOW BD. 1 P.C. ASSY. P/L A005229-01

PARTS LIST SPECIFICATION REV. A

Item	Part Number	Qty.	DESCRIPTION	
60	005464-05	1	PROM E 512 x 8 (4K) (82S115)	H1
61	005464-06	1	" F " " "	K1
62	005465-01	1	Memory Timing 32 x 8 (256) (82S123)	F2
63	005466-01	1	PROM 1 512 x 4 (2K) (82S131)	M2
64	005466-02	1	PROM 2 512 x 4 (2K) (82S131)	N2
65	78-16006	12	Silpad (TO-220)	
66	78-06001	1	Heatsink	
67	78-16005	1	Silpad (TO-3)	

*

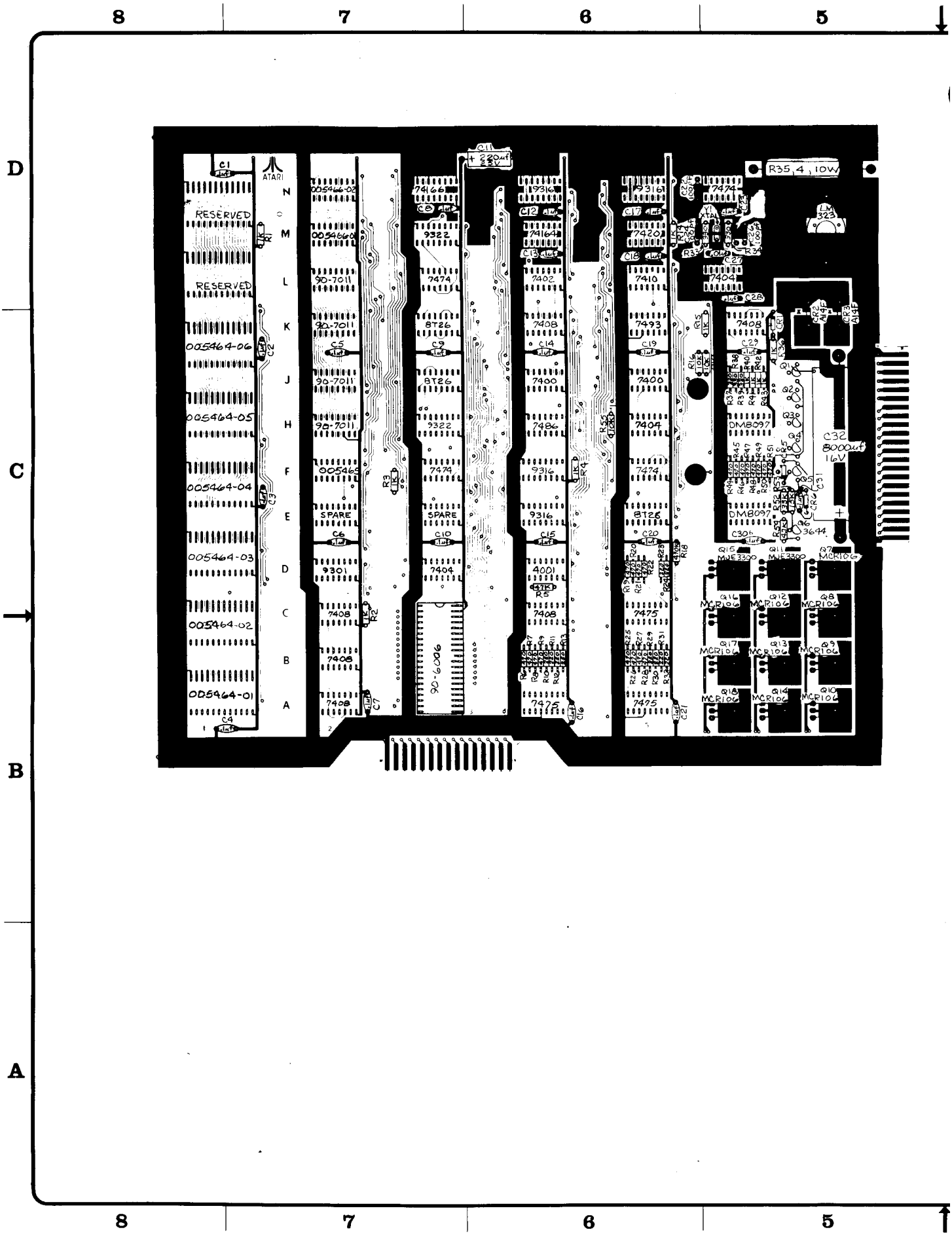

8
7
6
5
D
C
B
A
ATARI
RESERVED
RESERVED
005464-06
005464-05
005464-04
005464-03
005464-02
005464-01
N
M
L
K
J
H
F
E
D
C
B
A
005466-02
005466-01
90-7011
90-7011
90-7011
90-7011
005465
SPARE
9301
7408
7408
7408
74166
9322
7474
8T26
8T26
9322
7474
SPARE
7404
90-6006
9316
74164
7402
7408
7400
7486
9316
9316
4001
7408
7475
9316
7420
7410
7493
7400
7404
7474
8T26
7475
7475
7474
7404
7408
DM8097
DM8097
C32
8000uf
16V
R35, 4, 10W
LM
323
MJE3300
MJE3300
MCR106

REVISIONS				
SYM	DESCRIPTION	INITIALS and DATE		
		DRFTG	CHECK	ENGRG
A	PRODUCTION RELEASE			

NOTES:
1. ALL UNMARKED DIODES ARE IN914.
2. ALL UNMARKED TRANSISTORS ARE 2N3643.

MODIFICATIONS TO P.C. BOARD 005230 REV "A"
1. CUT AND LIFT PIN 6 OF F5(7474).
2. JUMPER FROM PAD OF LIFTED PIN 6 TO PIN 5 OF F5.

DRAWING NO. | SHEET | REV

INTERPRET THIS DRAWING PER USASI Y14.5

UNLESS OTHERWISE SPECIFIED DIMENSIONS ARE IN INCHES
TOLERANCES ON:
FRACTIONS = ±1/16 .x = ±.1
ANGLES = ±1° .xx = ±.03
SURFACE FINISH ✓ .xxx = ±.010

MATERIAL:

DRAWN BY DATE 3/29/76
CHECKED
DESIGN ENGINEER
PROJECT ENGINEER 1 APR 76
DOCUMENT CONTROL
APPROVED

ATARI INCORPORATED
14600 Winchester Boulevard
Los Gatos, California 95030

TITLE ASSEMBLY, QUIZ SHOW BD I

SIZE D | DRAWING NO. A005229 | REV A

SCALE 1/1 | SHEET 1 OF 1

NEXT ASSY	USED ON
	QUIZ SHOW

APPLICATION

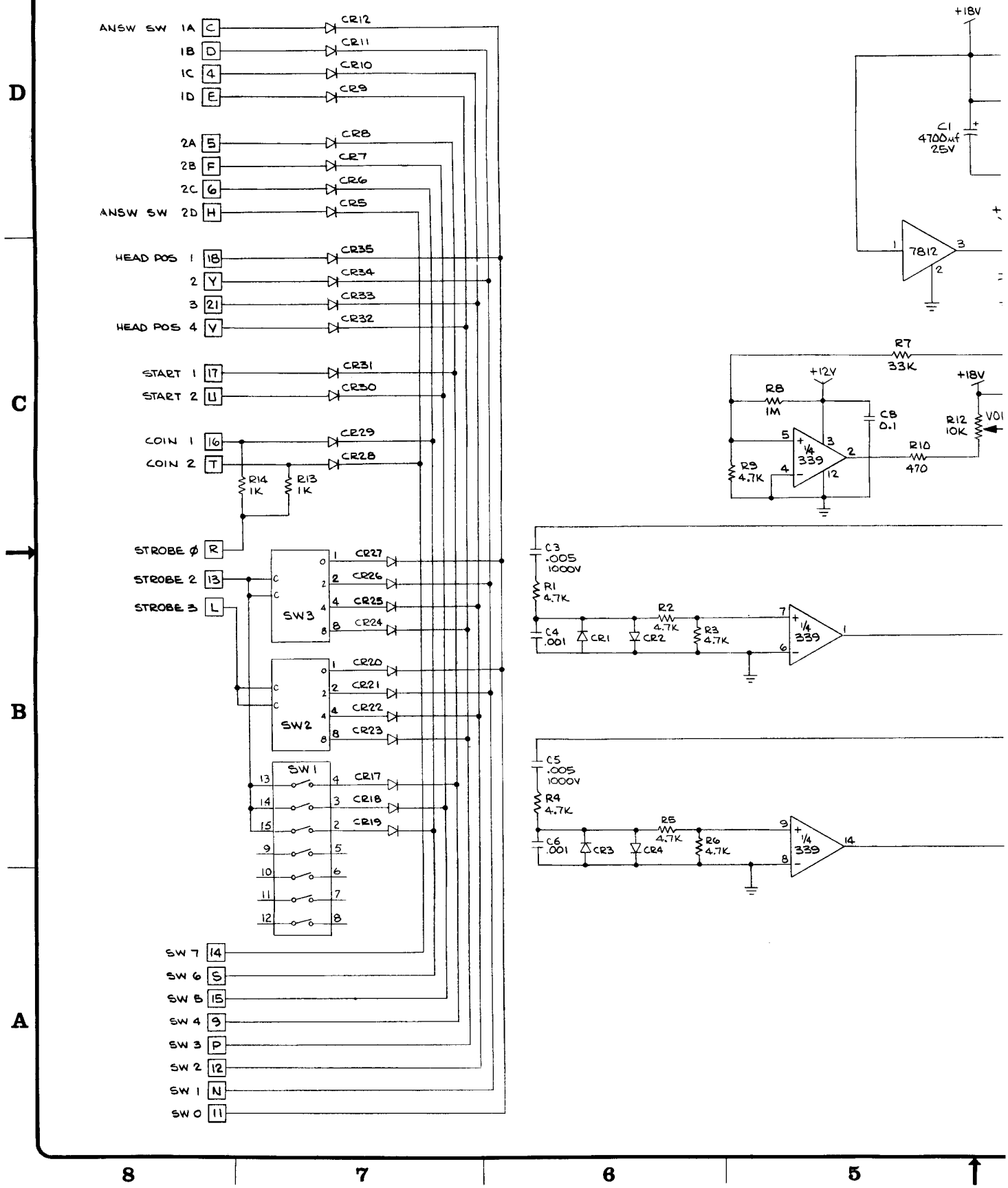
8
7
6
5
D
C
B
A
ANSW SW 1A C
1B D
1C 4
1D E
2A 5
2B F
2C 6
ANSW SW 2D H
HEAD POS 1 18
2 Y
3 21
HEAD POS 4 V
START 1 17
START 2 U
COIN 1 16
COIN 2 T
STROBE ϕ R
STROBE 2 13
STROBE 3 L
CR12
CR11
CR10
CR9
CR8
CR7
CR6
CR5
CR35
CR34
CR33
CR32
CR31
CR30
CR29
CR28
R14 1K
R13 1K
SW3
CR27
CR26
CR25
CR24
SW2
CR20
CR21
CR22
CR23
SW1
CR17
CR18
CR19
SW 7 14
SW 6 S
SW 5 15
SW 4 9
SW 3 P
SW 2 12
SW 1 N
SW 0 11
+18V
C1 4700uf 25V
7812
R7 33K
+12V
R8 1M
C8 0.1
1/4 339
R9 4.7K
R10 470
R12 10K
VOL
C3 .005 1000V
R1 4.7K
R2 4.7K
R3 4.7K
C4 .001
CR1
CR2
C5 .005 1000V
R4 4.7K
R5 4.7K
R6 4.7K
C6 .001
CR3
CR4

REVISIONS				
SYM	DESCRIPTION	INITIALS and DATE		
		DRFTG	CHECK	ENGRG
A	PRODUCTION RELEASE	3/30/76		

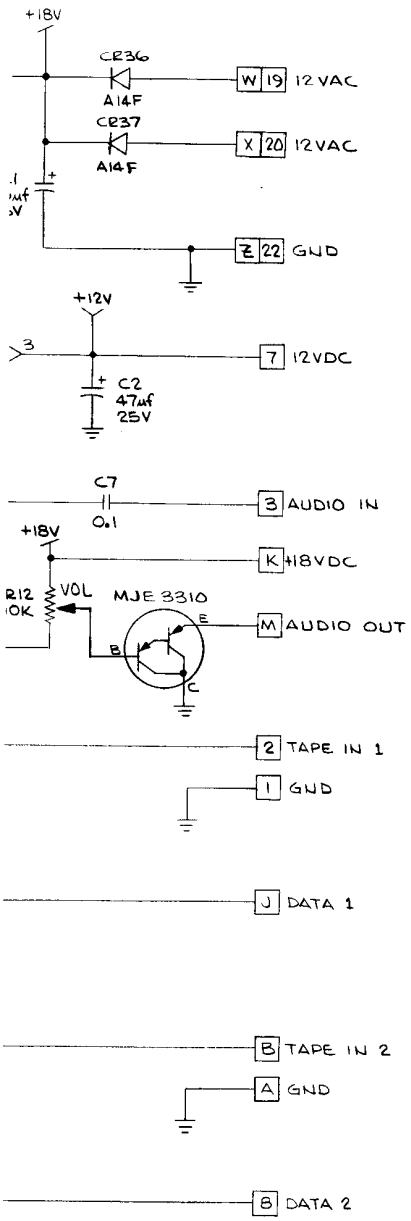

NOTES:

1. ALL UNMARKED DIODES ARE IN914.

REFERENCE DESIG	
LAST USED	UNUSED
R14	R11
C8	
CR37	CR13-16
Q1	
SW3	

A005231	
NEXT ASSY	USED ON
APPLICATION	

INTERPRET THIS DRAWING PER USASI Y14.5

UNLESS OTHERWISE SPECIFIED DIMENSIONS ARE IN INCHES
TOLERANCES ON:
FRACTIONS = ±1/16 .x = ±.1
ANGLES = ±1° .xx = ±.03
SURFACE FINISH ✓ .xxx = ±.010

MATERIAL

DRAWN BY DATE
CHECKED
DESIGN ENGINEER
PROJECT ENGINEER 30 MAR 76
DOCUMENT CONTROL
APPROVED

ATARI INCORPORATED
14600 Winchester Boulevard
Los Gatos, California 95030

TITLE SCHEMATIC, QUIZ SHOW BOARD 2

SIZE D | DRAWING NO. 005231 | REV A

SCALE | SHEET 1 OF 1

DRAWING NO. | SHEET | REV

QUIZ SHOW

ATARI™ Innovative leisure

ASSEMBLY TITLE / QUIZ SHOW BOARD II — P/L A005231

PARTS LIST SPECIFICATION — Page 1 of 1

Drawn		REV. A
Checked	Mech. Eng.	
Proj. Eng.	Elec. Eng	

Rev.	Description	Date	Apprv.	Rev.	Description	Date	Apprv.
A	PROD. REL.	3/25/76					

Item	Part Number	Qty.	DESCRIPTION	
1	005232	1	PRINTED CIRCUIT BOARD	
2	10-5102	2	Res.,Carbon, 5%, ¼W, 1K OHM	R13,14
3				
4	10-5105	1	" " " " 1M OHM	R8
5	10-5333	1	" " " " 33K OHM	R7
6	10-5471	1	" " " " 470 OHM	R10
7	10-5472	7	" " " " 4.7K OHM	R1-6,9
8	19-315103	1	Trimpot, 10K	R12
9	24-250476	1	Cap., Electrolytic, 47uf, 25V	C2
10	24-250478	1	" " 4700uf, 25V	C1
11	27-250102	2	Cap., Ceramic Disc, .001uf, 25V	C4,6
12	27-102502	2	" " " .005uf, 1000V	C3,5
13	27-250104	2	" " " .1uf, 25V	C7,8
14	31-IN914	31	Diode, IN914	CR1-12,17-35
15	31-A14F	2	Diode, A14F	CR36,37
16	33-MJE3310	1	Transistor, MJE3310 Power	Q1
17	37-7812	1	Voltage Reg., 7812	
18	37-LM339	1	I.C., LM339	
19	63-01101	2	Switch, Thumbwheel,	SW2,3
20	66-024P1T	1	Switch, Dip, 4 x SPST	SW1
21	72-1406C	2	Screw, Pan Hd., Phil., 4-40 x 3/8" LG CRES	
22	75-054	2	Washer, Lock, Int. Star, #4	
23	75-914C	2	Nut, Hex, #4-40 CRES	
24	75-014S	2	Flat Washer #4	

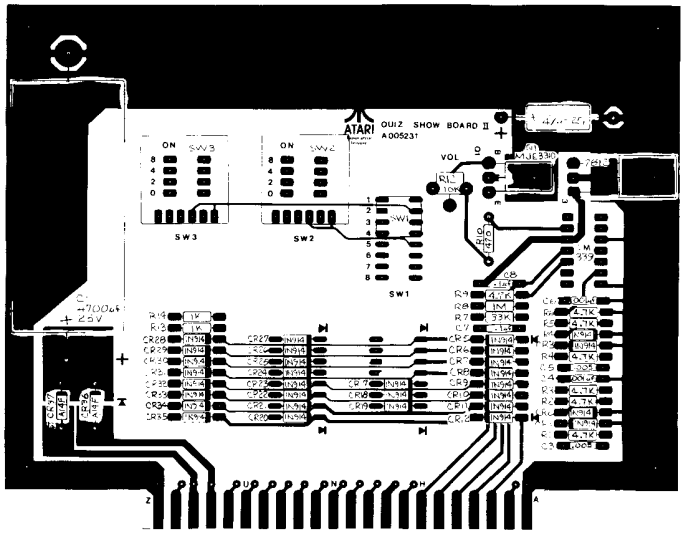

REVISIONS				
SYM	DESCRIPTION	INITIALS and DATE		
		DRFTG.	CHECK	ENGRG.
A	PRODUCTION RELEASE	3/30/76		

NOTICE TO ALL PERSONS RECEIVING THIS DRAWING CONFIDENTIAL. Reproduction Forbidden without the specific written permission of Atari Inc., Los Gatos, California. This drawing is only conditionally issued, and neither receipt nor possession thereof confers or transfers any right in, or license to use, the subject matter of the drawing or any design or technical information shown thereon, nor any right to reproduce this drawing or any part thereof, except for manufacture by vendors for Atari Incorporated and for manufacture under the corporation's written license, no right to reproduce this drawing is granted or the subject matter thereof noted by written agreement with or written permission from the corporation.

NEXT ASSY	USED ON
	QUIZ SHOW
APPLICATION	

INTERPRET THIS DRAWING PER USASI Y14.5

UNLESS OTHERWISE SPECIFIED DIMENSIONS ARE IN INCHES TOLERANCES ON

FRACTIONS = ±1/16 x = ±.3
ANGLES = ±1° xx = ±.03
SURFACE FINISH ✓ xxx = ±.010

MATERIAL

	DATE
DRAWN BY	2-25-76
CHECKED	
DESIGN ENGINEER	
PROJECT ENGINEER	MAR 76
DOCUMENT CONTROL	
APPROVED	

ATARI

ATARI INCORPORATED
14600 Winchester Boulevard
Los Gatos, California 95030

TITLE ASSEMBLY, QUIZ SHOW BD II

SIZE	DRAWING NO.	REV
D	A005231	A

SCALE 2/1 SHEET 1 OF 1

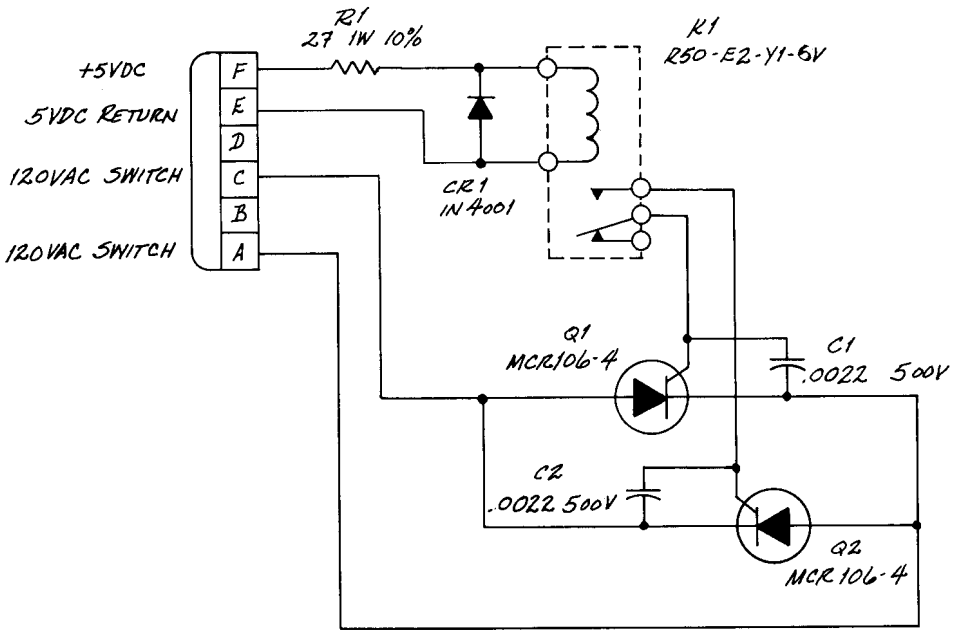

	QUIZ SHOW
NEXT ASSY	USED ON
APPLICATION	

2 1

REVISIONS				
SYM	DESCRIPTION	INITIALS and DATE		
		DRFTG.	CHECK	ENGRG
A	PRODUCTION RELEASE	3/30/76		

D

C

B

A

INTERPRET THIS DRAWING PER USASI Y14.5

UNLESS OTHERWISE SPECIFIED DIMENSIONS ARE IN INCHES TOLERANCES ON:

FRACTIONS = ±1/16 .x = ± .1
ANGLES = ±1° .xx = ± .03
SURFACE FINISH √ .xxx = ± .010

MATERIAL:

DRAWN BY DATE 2/26/76

CHECKED

DESIGN ENGINEER

PROJECT ENGINEER 30 MAR 76

DOCUMENT CONTROL

APPROVED

ATARI

ATARI INCORPORATED
14600 Winchester Boulevard
Los Gatos, California 95030

TITLE SCHEMATIC DIAGRAM
A.C. POWER RELAY ASSY

SIZE B | DRAWING NO. 005249 | REV A

SCALE | SHEET 1 OF 1

2 1

QUIZ SHOW

ATARI™ Innovative leisure

ASSEMBLY TITLE / A.C. POWER RELAY ASSY P/L A 005249

PARTS LIST SPECIFICATION Page 1 of 1

Drawn 2/25/76		
Checked	Mech. Eng.	
Proj. Eng.	Elec. Eng	REV. A

Rev.	Description	Date	Apprv.	Rev.	Description	Date	Apprv.
A	PROD. REL.	3/30/76					

Item	Part Number	Qty.	DESCRIPTION	
1	005250	1	PCB, Blank, A.C. Power Relay	
2	27-501222	2	Capacitor, Ceramic, 500V, .0022ufd	C1,2
3	31-1N4001	1	Rectifier, 1N4001	CR1
4	35-MCR106-4	2	Silicon Controlled Rectifier, MCR106-4	Q1,2
5	43-8003	1	Relay, P&B R50-E2-Y1-6V	K1
6	12-0270	1	Resistor, Carbon, 27 ohms, 1w, 10%	R1

REVISIONS				
SYM	DESCRIPTION	INITIALS and DATE		
		DRFTG	CHECK	ENGRG
A	PRODUCTION RELEASE	3·30·76		

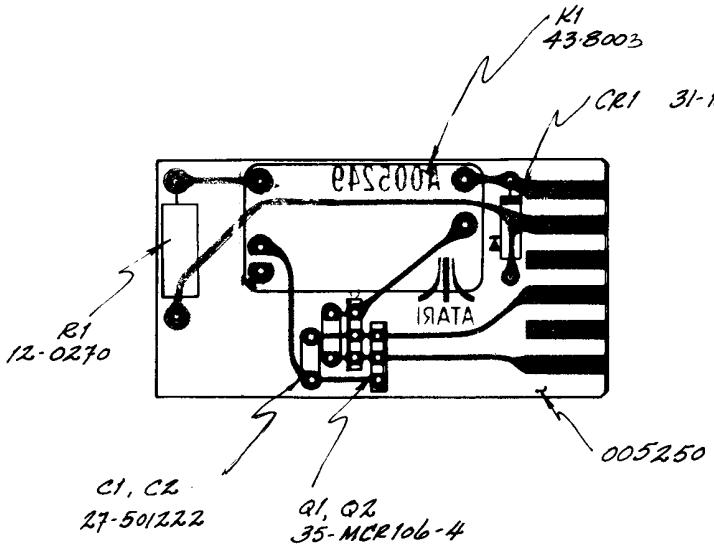

INTERPRET THIS DRAWING PER USASI Y14.5	DRAWN BY	DATE	ATARI INCORPORATED 14600 Winchester Boulevard Los Gatos, California 95030
UNLESS OTHERWISE SPECIFIED DIMENSIONS ARE IN INCHES TOLERANCES ON: FRACTIONS = ±1/16 .x = ±.1 ANGLES = ±1° .xx = ±.03 SURFACE FINISH ✓ .xxx = ±.010	CHECKED		
	DESIGN ENGINEER		
	PROJECT ENGINEER	30 MAR 76	TITLE ASSEMBLY DWG POWER RELAY
MATERIAL SEE P/L A005249	DOCUMENT CONTROL		
	APPROVED		SIZE B · DRAWING NO. A005249 · REV A
NEXT ASSY: QUIZ SHOW · USED ON			SCALE · SHEET 1 OF 1
APPLICATION			

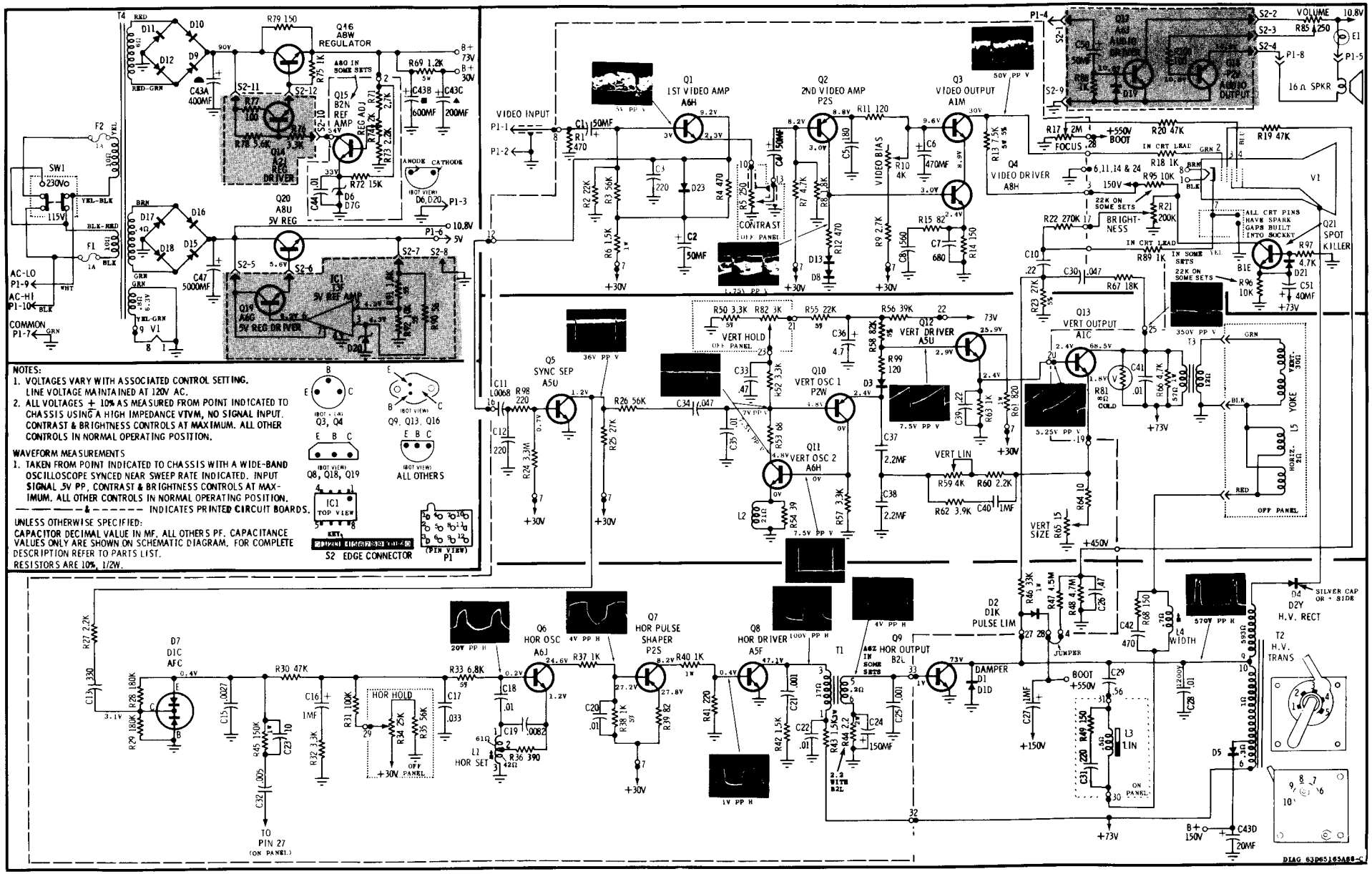

Schematic, Motorola XM501/XM701 Monitor