MINI-GOLF FIELD CONVERSION KIT

SAC 1, SAC 1A & SAC 1B

Bally SENTE™

10601 W. Belmont Avenue
Franklin Park, Illinois 60131
U.S.A.

Phone (312) 451-9200 Cable Address MIDCO Telex No. 72-1596

M051-00E04-A009

WARNING

THIS GAME MUST BE GROUNDED. FAILURE TO DO SO MAY RESULT IN DESTRUCTION TO ELECTRONIC COMPONENTS.

WARNING: This equipment generates, uses, and can radiate radio frequency energy and if not and used in accordance with the instructions manual, may cause interference to radio communications. It has been tested and found to comply with the limits for a CLASS A computing device pursuant to SUBPART J of PART 15 of FCC RULES, which are designed to provide reasonable protection against such interference when operated in a commerical environment. Operation of this equipment in a residential area is likely to cause interference in which case the user at his own expense will be required to take whatever measures may be required to correct the interference.

ELECTRICAL BULLETIN: FOR ALL APPARATUS COVERED BY THE CANADIAN STANDARDS ASSOCIATION (CSA) STANDARD C22.2 NO. 1, WHICH EMPLOYS A SUPPLY CORD TERMINATED WITH A POLARIZED 2-PRONG ATTACHMENT PLUG.

CAUTION: TO PREVENT ELECTRIC SHOCK DO NOT USE THIS (POLARIZED) PLUG WITH AN EXTENSION CORD, RECEPTACLE OR OTHER OUTLET UNLESS THE BLADES CAN BE FULLY INSERTED TO PREVENT BLADE EXPOSURE.

ATTENTION: POUR PREVENIR CHOCS ELECTRIQUES NE PAS UTILISER CETTE FICHE POLARISEE AVEC UN PROLONGATEUR, UNE PRISE DE COURANT OU UNE AUTRE SORTIE DE COURANT, SAUF SI LES LAMES PEUVENT ETRE INSEREES A FOND SANS EN LAISSER AUCUNE PARTIE A DECOUVERT.

Bally SENTE *Invites You To Use*

OUR TOLL FREE NUMBER FOR SERVICE INFORMATION CONCERNING THIS GAME, OR ANY OTHER BALLY MIDWAY GAME YOU NOW HAVE ON LOCATION.

CALL US FOR PROMPT, COURTEOUS ANSWERS TO YOUR PROBLEMS.

VIDEO ⟶ Continental U.S. 1-800-323-7182

Bally SENTE — 10601 West Belmont Avenue Franklin Park, Illinois, 60131 phone (312)451-9200

© COPYRIGHT MCMLXXXV BY Bally SENTE ALL RIGHTS RESERVED

NO PART OF THIS PUBLICATION MAY BE REPRODUCED BY ANY MECHANICAL, PHOTOGRAPHIC, OR ELECTRONIC PROCESS, OR IN THE FORM OF A PHONOGRAPHIC RECORDING, NOR MAY IT BE TRANSMITTED, OR OTHERWISE COPIED FOR PUBLIC OR PRIVATE USE, WITHOUT PERMISSION FROM THE PUBLISHER. THIS MANUAL IS FOR SERVICE USE ONLY, AND NOT FOR GENERAL DISTRIBUTION. FOR PERMISSION REQUESTS, WRITE: BALLY SENTE MFG. CO., 10601 W. BELMONT AVE., FRANKLIN PARK, IL 60131

Printed in U.S.A.

WARNING

The parts contained in this field conversion kit must be installed without deviation from the instructions contained in this manual and kit. Failure to follow these instructions in every detail may result in the creation of illegal interference to radio and TV reception.

BALLY SENTE has verified that this field conversion kit, when installed in the game(s) specified in this manual, complies with the requirements in Part 15 of the FCC rules for a Class A computing device. Operation of this equipment in a residential area may cause unacceptable interference to radio and TV reception, requiring the operator to take whatever steps are necessary to correct the interference.

BALLY SENTE will not be responsible for incomplete or improper conversions, or installation in a game for which this field conversion kit is not intended. If this field conversion kit is installed in a game that is not specified in this manual or in a previously converted game, the operator is required to take whatever steps are necessary to insure compliance with the requirements in Part 15, Subpart J, of the FCC Rules for a Class A computing device.

SPECIAL NOTE:

DO NOT DISCARD ANY OF THE PARTS YOU REMOVE WHEN MAKING THE MODIFICATIONS EXPLAINED IN THIS MANUAL.

THEY WILL BE RE-USED IN FUTURE CONVERSION KIT!

MINI-GOLF KIT CONVERSION PROCEDURE
FOR SAC 1B, SAC 1A OR SAC 1

To Change Attract (Header) Art

1. Remove bolts holding in Attract Retainer located at top front of cabinet. Remove Attract Retainer.
2. Slide Attract Glass up and out of cabinet.
3. Remove old Attract Art and replace with new Attract Art.
4. Slide Attract Glass containing new are back into cabinet.
5. Replace and secure Attract Retainer.
6. Clean front of Attract Glass.

To Change Control Panel Insert Assembly (SAC 1B, SAC 1A or SAC 1)

1. Power off SAC 1B (SAC 1A or SAC 1) unit using switch on top of cabinet toward the back.
2. Unlock Coin Mech door and reach through to unlatch large front door from inside cabinet. (One side latch for SAC 1A or SAC 1. One top latch and one bottom latch for SAC 1B.)
3. unlatch two (2) clamps locating inside the cabinet at each end of Control Panel.
4. Disconnect the Control Panel Insert Assembly harness from the main harness of SAC 1B (SAC 1A or SAC 1) unit.
5. **SAC 1B or SAC 1A Unit:** Swing out Control Panel on its hinge.
   SAC 1 Unit: Lift Control Panel up, slide to right and pull down to remove. Carefully pull Control Panel harness wiring out of opening at rear of Control Panel tray.
6. Remove bolts and nuts securing the old Control Panel Insert Assembly to the Control Panel. Remove old Insert Assembly.
7. Install new Control Panel Insert Assembly by reversing this procedure.
8. Power on SAC 1B (SAC 1A or SAC 1) unit using switch at rear of cabinet.
9. Play game to check if all switches and controls are working properly.

To Change Game Cartridge

1. Power off SAC 1B (SAC 1A or SAC 1) unit using switch on top of cabinet toward the back.
2. Unlock Coin Mech door and reach through to unlatch large front door from inside cabinet.
3. Find Game Cartridge On/Off Switch located at bottom front right of Electronic Chassis just inside large front door (this switch may be used to power unit on and off in place of switch at rear of cabinet).
4. Turn Game Cartridge On/Off Switch off to permit Game Cartridge to slide out of Electronic Chassis.
5. Slide old Game Cartridge out of chassis.
6. Slide new Game Cartridge between runners to plug into the Main PC Board. Be sure Game Cartridge is securely plugged in. ROMs on the Game Cartridge should be facing to the left as you look into the cabinet.
7. Turn Game Cartridge On/Off Switch back on (this also locks cartridge into place).
8. Check game option switch settings.
9. Close and latch large front door.
10. Close and lock Coin Mech door.
11. Power on SAC 1B (SAC 1A or SAC 1) unit using switch at rear of cabinet.
12. Play game to test if unit is working properly.

BE SURE TO SAVE GAME CARTRIDGE, CONTROL PANEL INSERT, AND ATTRACT (HEADER FOR REUSE).

LIST OF MAJOR PARTS
INCLUDED IN YOUR FIELD CONVERSION KIT
FOR MINI-GOLF U.R.

PART NUMBER	DESCRIPTION
A084-91798-AE04	PROGRAMMED CARTRIDGE: MINI-GOLF
M051-00E04-A009	CONVERSION KIT INSTRUCTIONS
M051-00E04-A007	OPTION SWITCH SETTINGS TAG
0E04-00900-0000	ATTRACT HEADER - MINI-GOLF U.R.
AE04-00004-0000 (Includes Following Items)	CONTROL SHELF INSERT ASSEMBLY
AE04-00005-0000	CONTROL SHELF CABLE ASSY.
U006-08004-100A	TRACKBALL P.C.B. ASSY.
0E03-00100-00XF	INSERT: CONTROL SHELF
0017-00009-0612	TRACKBALL: CONTROL ASSY.
0017-00032-0092	SWITCH: SPDT P.B. MOMENTARY LED (4 Req'd.)
0929-00905-00XF	SWITCH BEZEL
0017-00032-0150	SWITCH ASSY.: P.B. ROUND SPST - RED

MINI-GOLF game review

Self Test

Pressing the self-test switch on the chassis tray will cause the program to enter a sequenced self-test mode. First the screen RAM is tested by outputting a pattern to the monitor and checking it. This part of the test takes about 3 seconds and results in status screen that indicates whether the screen RAM is good and also indicates the status of the ROM checksums. Pressing start 1 will then go to the switch input test where the state of all the controls and option switches is presented to the user. Pressing start 1 again will take the user to the game score statistics screen where a cumulative graph of scores and other information is presented to the viewer. Next start 1 again will take the user to a similar game time statistics screen. On either this screen or the prior one, the user may choose to reset the cumulative statistics and high scores by pressing the start 2. Pressing start 1 yet again returns the user to the switch input screen. To exit self-test mode, the self-test switch must be returned to its original position on the game chassis.

Attract Mode

1. When game is first powered on or when self-test mode is exited, a blank screen with the message loading appears for approximately 30 seconds. (This is to allow the sound circuitry to be initialized).
2. Title screen will appear (approx. 8 seconds).
3. High score screen will appear (approx. 8 seconds).
4. Demonstation screen will appear (approx. 8 seconds).
5. Credits screen will appear (approx. 10 seconds).
6. Missing kids screen will appear (approx. 8 seconds).
7. Cycle repeats from Step 2.

Game Description

Mini Golf is a 1 to 4 player top-down miniature golf game. The game contains 18 holes and also contains a switch-selectable add-a-coin option to consist of a trackball by which the player "hits" the golf ball with a given force and direction and a tee select switch which allows the player to select his tee-off position on the mat on his first shot for each hole.

Each player is given 3 holes to start with and may earn additional holes by shooting below par on each hole as he proceeds. The number of extra holes still available to the player is indicated in the upper right hand corner of the screen. The number of holes to be earned on any given shot is represented by little flags depicted in the score box under bonus. The bonus entry also gives the score to be earned on the same shot should the player sink the ball. Total score for each player is given in the score box as well as total strokes compared to total par. The player who is currently up also has his score shown in the upper left hand corner. When a player runs out of holes the add-a-coin option, if enabled, will allow the player 10 seconds to put more credit into the machine and press start to continue with the game. If a player chooses to do so, 3 additional holes are given to the player. Note that this option is automatically disabled on the last 4 holes of the game since a player must be of a skill level to complete the game himself. Note also that this option is allowed once only for each player during a game.

MINI-GOLF U.R.

OPTION SWITCH SETTINGS - DIP SWITCH "G1"

////////////////////////////////////GAME TIME OPTIONS////////////////////////////////////

	SW#1	SW#2	SW#3	SW#4	SW#5	SW#6	SW#7	SW#8
DISABLE ADD-A-COIN	*OFF	XX	XX	XX	XX	XX	XX	
ENABLE ADD-A-COIN	ON	XX	XX	XX	XX	XX	XX	

//////////////////////////////////// ATTRACT MODE MUSIC ////////////////////////////////////

NO MUSIC IN ATTRACT MODE	XX	XX	XX	XX	XX	XX		OFF
MUSIC IN ATTRACT MODE	XX	XX	XX	XX	XX	XX		ON

*** INDICATED FACTORY RECOMMENDED SETTINGS**

PART NO. M051-00E04-A007

MINI-GOLF U.R.

OPTION SWITCH SETTINGS - DIP SWITCH "H1"

//////////////////////////////////// COINS PER CREDIT ////////////////////////////////////

VARIOUS CREDIT OPTIONS	SW#1	SW#2	SW#3	SW#4	SW#5	SW#6	SW#7	SW#8
FREE PLAY	ON	ON						
1 COIN / 1 CREDIT	*OFF	ON						
1 COIN / 2 CREDITS	ON	OFF						
2 COINS / 1 CREDIT	OFF	OFF						

//////////////////////////////////// COINS ADD BONUS COINS ////////////////////////////////////

NO BONUS COINS	*ON	ON	ON
2 COINS ADDS 1 BONUS COIN	OFF	ON	ON
3 COINS ADDS 1 BONUS COIN	ON	OFF	ON
4 COINS ADDS 1 BONUS COIN	OFF	OFF	ON
4 COINS ADDS 2 BONUS COINS	ON	ON	OFF
5 COINS ADDS 1 BONUS COIN	OFF	ON	OFF
5 COINS ADDS 2 BONUS COINS	ON	OFF	OFF
5 COINS ADDS 3 BONUS COINS	OFF	OFF	OFF

//////////////////////////////////// COIN MECH MULTIPLIER ////////////////////////////////////

LEFT COIN MECH X 1	* ON	
LEFT COIN MECH X 2	OFF	
RIGHT COIN MECH X 1	* ON	ON
RIGHT COIN MECH X 4	OFF	ON
RIGHT COIN MECH X 5	ON	OFF
RIGHT COIN MECH X 6	OFF	OFF

*** INDICATED FACTORY RECOMMENDED SETTINGS**

PART NO. M051-00E04-A007

C. P. U. BOARD REFERENCE DRAWING

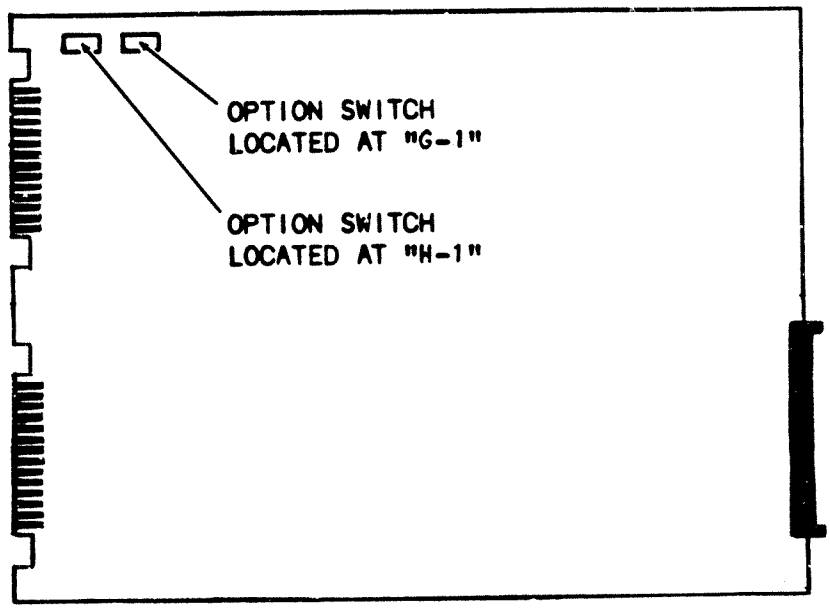

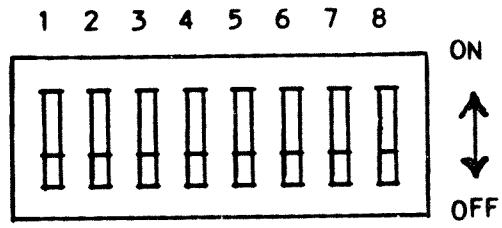

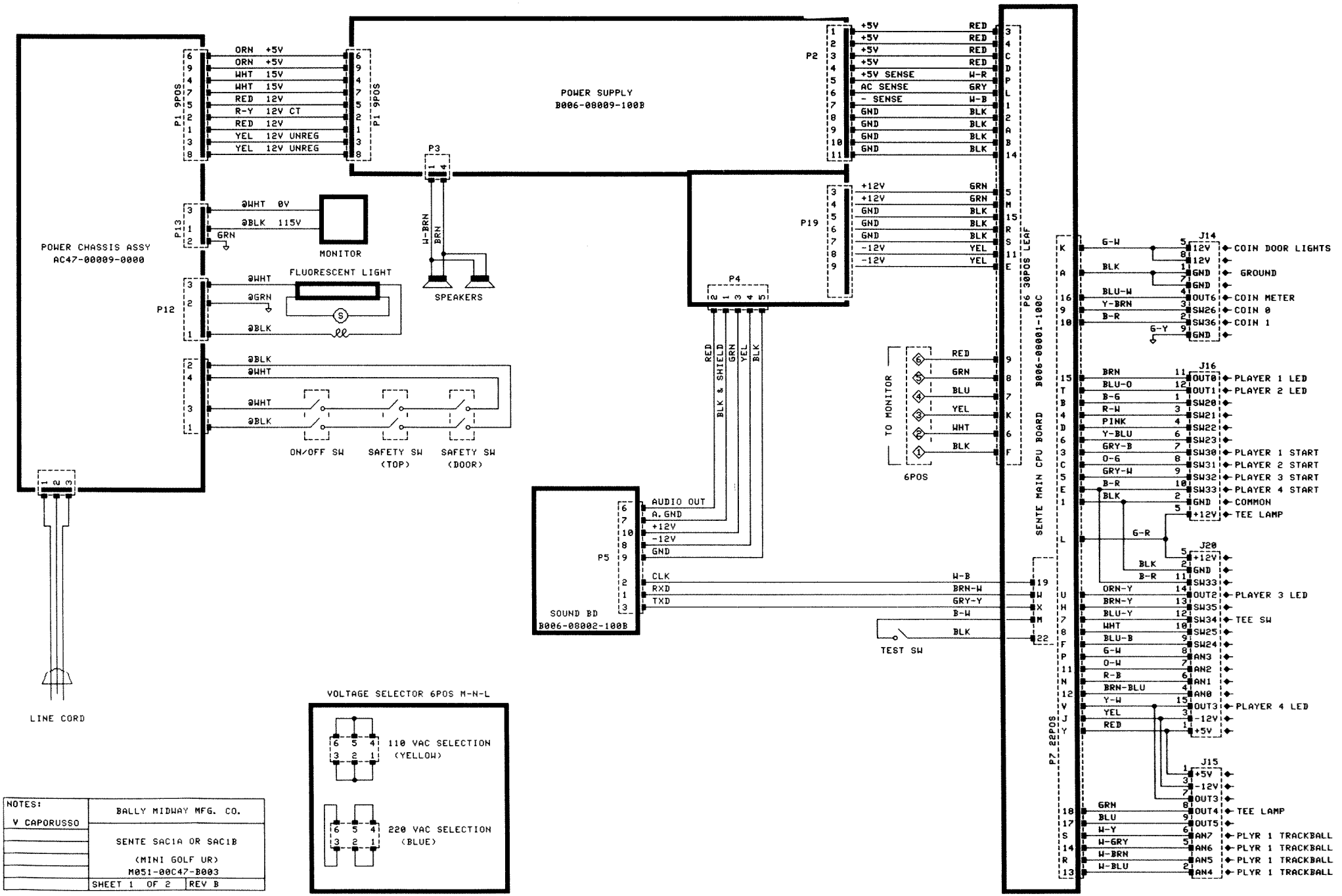

NOTES:	BALLY MIDWAY MFG. CO.	
V CAPORUSSO	SENTE SAC1A OR SAC1B (MINI GOLF UR) M051-00C47-B003	
	SHEET 1 OF 2	REV B

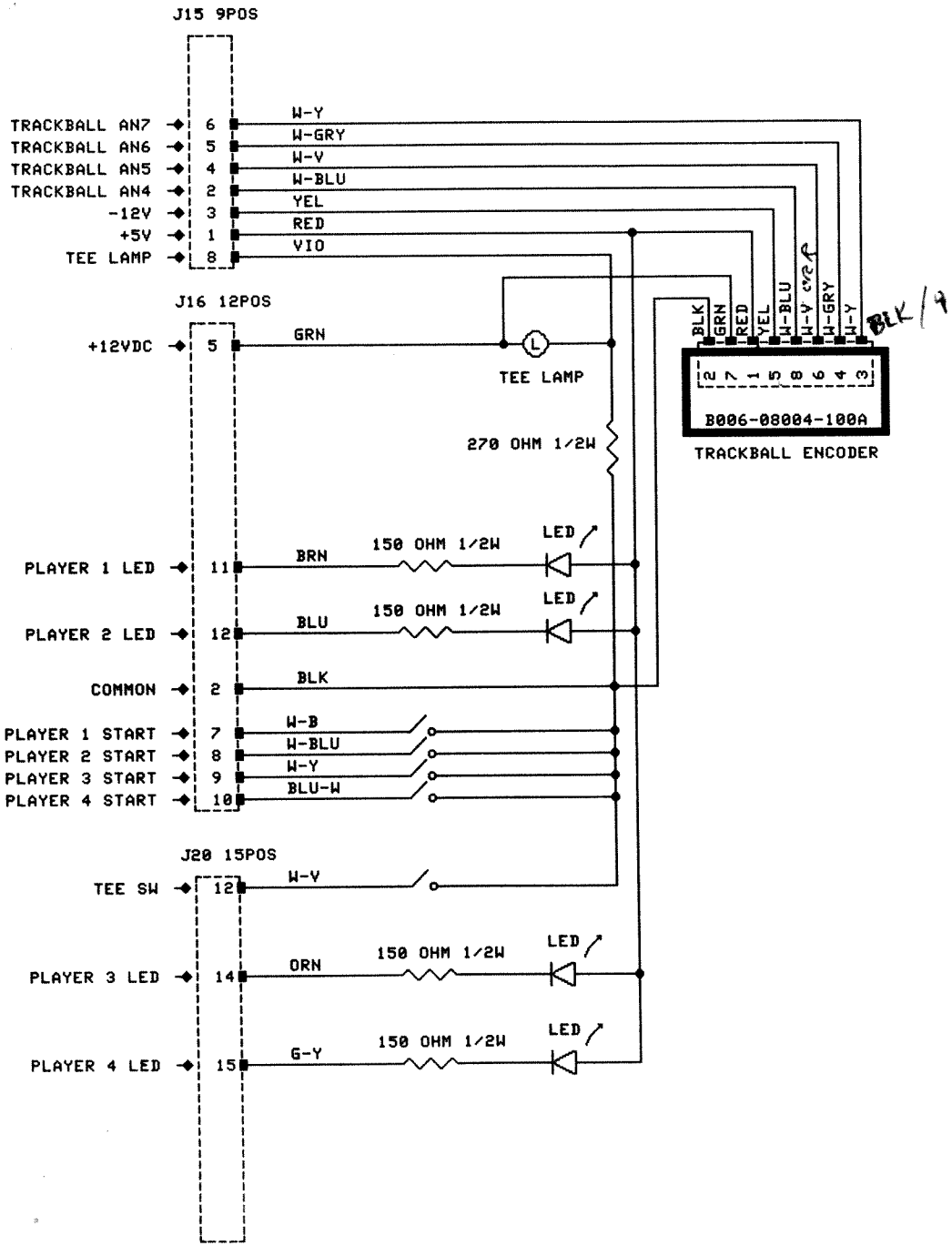

NOTES: V CAPORUSSO	BALLY MIDWAY MFG. CO.	
	CONTROL PANEL WIRING MINI GOLF UR M051-00E04-A003	
	SHEET 2 OF 2	REV B

14 OCT 85 09:46 /USER/VMC/SENTE_CON 1.DRAW

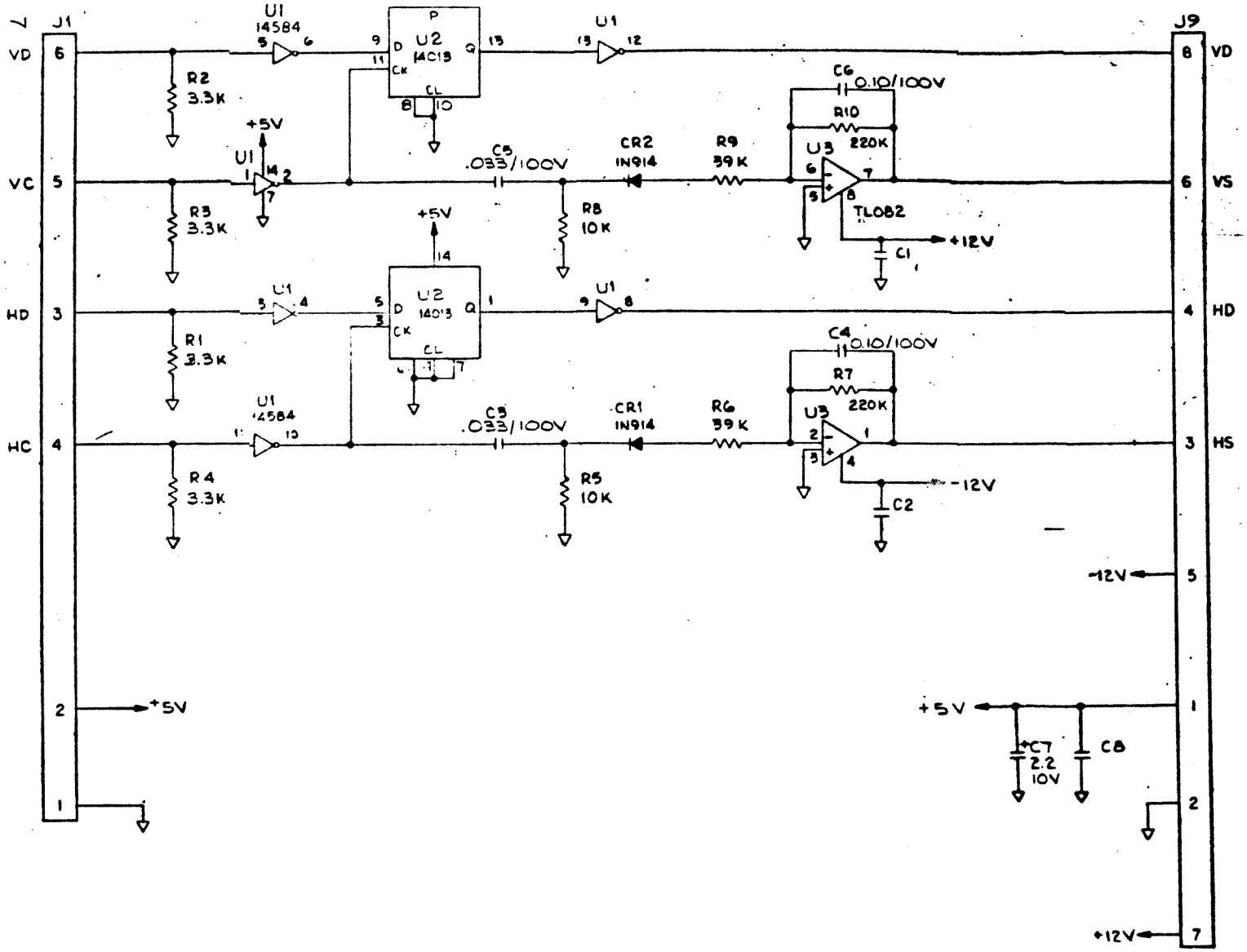

REVISIONS DESCRIPTION	DATE	APPROVED
PROTOTYPE		
PRODUCTION RELEASE		
R1-R4 WAS 2.2K ; R1-R4 IS 3.3K		

SYM	REV	ECO NO.
1	1	
	A	1892
	A1	1964

NOTES: UNLESS OTHERWISE SPECIFIED

1. ALL CAPACITORS ARE IN MICROFARADS, 0.1/50V.
2. ALL RESISTORS ARE IN OHMS, 1/4 W, 5%.
3. LAST REFERENCE DESIGNATOR USED: R10, C8, CR2, U3, J2.

RELEASED BY: RLW 10-2-85 M051-00818-A008

ITEM	DESCRIPTION/MATERIAL	QTY

DO NOT SCALE DRAWING

DRAWN: 8-5-83

CHECKED: L. FORTE 11/3/83

MFG. ENGINEER: 11/29/83

BALLY SENTE

TITLE: PCB SCHEMATIC TRACKBALL CONV

SIZE: D DRAWING NO. 008-8004-10-04 REV A1

SCALE: NONE SHEET 1

DASH NO | NEXT ASSY NO | USED ON

SYM	REV	ECO NO	REVISIONS DESCRIPTION	DATE	APPROVED
1	1		PROTOTYPE REVISION	[illegible]	[illegible]
	A	1892	PRODUCTION RELEASE	[illegible]	[illegible]
	A1	1964	R1-R4 WAS 2.2K ; IS 3.3K	[illegible]	[illegible]

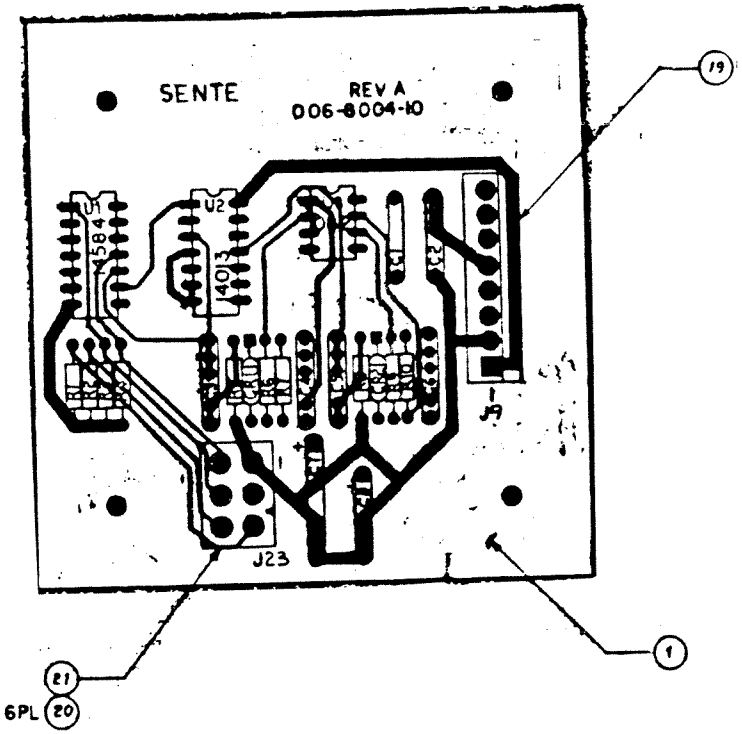

RELEASED BY: RLW 10-3-85

M051-00B18-A007

ITEM	DESCRIPTION MATERIAL	QTY
10	000-8002-10	
DASH NO	NEXT ASSY NO	
USED ON		

UNLESS OTHERWISE SPECIFIED DIMENSIONS ARE IN INCHES TOLERANCES ON
ANGLES ± 1°
SURFACE FINISH ✓ X = ± 1 XX = ± .03 XXX = ± .010

MATERIAL: SEE L/M

FINISH

DO NOT SCALE DRAWING

DRAWN BY: G CAINAP DATE: 8/30/83

CHECKED: L FORTE 11/3/83

ENGINEER

MFG ENGINEER 11/24/83

PROJECT ENGINEER

BALLY SENTE

TITLE: PCB ASSEMBLY, TRACKBALL CONVERTER

SIZE: D DRAWING NO: 006-8004-10-OA REV: A1

SCALE: 2/1 SHEET: 1 OF 2

NOTICE TO ALL PERSONS RECEIVING THIS DRAWING CONFIDENTIAL